BC 01

BETEC CAD.

Variable Air Volume Controls

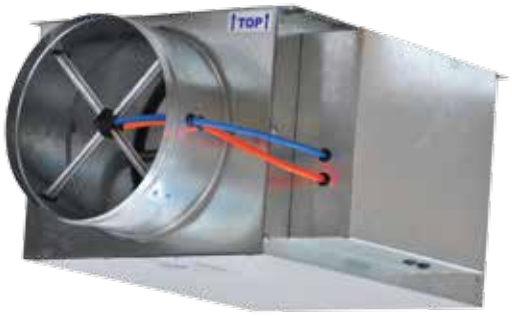

AHRI CERTIFIED®
www.ahridirectory.org
Globally Recognized. Industry Respected.

VAV-GB-31E

Selected Products of the company have been Classified / Listed / Tested by various international testing authorities.

AHRI CERTIFIED® www.ahridirectory.org Globally Recognized. Industry Respected.

BETEC CAD.

Table Of Contents

S. No	Description	Page No
1	General Information	1-2
2	B - 10 Series - By Pass Type	3-6
3	B - 20 Series - Pressure Dependent Type	7-11
4	B - 30 Series - Pressure Independent Type	12-16
5	Dual Duct Type VAVs	17-20
6	Heavy Duty VAVs	21-22
7	B - 40 Series - Induction Type	23-26
8	B - 50 Series - Constant Air Volume CAV	27-30
9	B - 60 Series - Fan Powered Type VAV	31-34
10	Optional Fittings (Heater)	35

Variable Air Volume Boxes

BETEC CAD manufactures Variable Air Volume **(VAV)** control assemblies, which are normally used in central air conditioning systems. These **VAV** boxes are designed to maintain the temperature for a desired level of occupant comfort by controlling the volume flow rate of the conditioned air in to an occupied zone in response to a duct static pressure or zone temperature control signal.

VAV-GB-31F

Standard Types and Models					
Item	**Series**	**Material**	**Model**	**Type**	**Controls**
VAV	B-10	G* / S	B-11	Top By pass Type - VAV	On/Off* / Modulating Analog / Digital
			B-12	Side By pass Type - VAV	
	B-20	G* / S	B-21	Pressure Dependent Type - VAV	On/Off / Modulating* Analog / Digital
			B-22	Pressure Dependent Type - Round VAV	
	B-30	G* / S	B-31	Pressure Independent Type - VAV	PI Modulating* Analog / Digital
			B-32	Pressure Independent Type -Round VAV	
	B-40	G* / S	B-41	Induction Type - VAV	PI Modulating* Analog / Digital
CAV	B-50	G* / S	B-51	Constant Air Volume - CAV	PI Modulating* Analog / Digital
VAV	B-60	G* / S	B-61	Fan Powerd Type - VAV	PI Modulating* Analog / Digital
			B-62	Fan Powerd Type - VAV	

Material Details

• All types and models of volume control dampers are available in GI*, SS according to the design & application.

Sheet Metal Galvanized Steel (GI)

Zinc coating Z-22 to Z-27 as per ASTM-A653 Standards.

Sheet Metal Stainless Steel (SS)

Stainless steel **304 / 316L** .

Applications:

GI Construction : For **HVAC** commercial, Residential etc.
SS Construction : For Offshore , Oil & Gas etc.

The respective alphabet indicates the type of material.
G*- Galvanized steel **(GI)**
S - Stainless steel **(SS)**

All **VAV** are internally lined, sealed, gasketed and manufactured as per international standards DW142 and confirmed to NFPA 90 A and UL 181 standards for erosion.

Note:

* Indicates ***BETEC CAD's* Standard** Construction **/ **** Indicates **Optional** Construction.

Selected Products of the company have been Classified / Listed / Tested by various international testing authorities.

Variable Air Volume Boxes

Standard Features

BETEC CAD manufactures a variety of models to suit various types of applications.

1. VAV B-10 Series
By Pass Application
Variable Air Volume

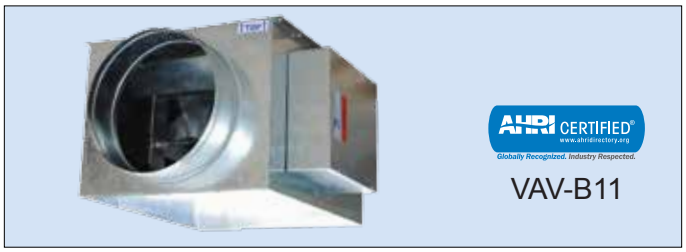

2. VAV B - 20 Series
Pressure Dependent
Variable Air Volume

3. VAV B-30 Series
Pressure Independent Application
Variable Air Volume

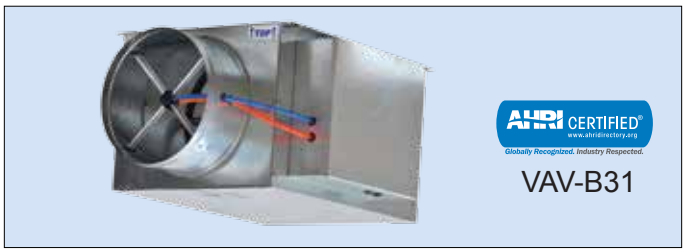

4. VAV B-40 Series
Pressure Independent Induction Application
Variable Air Volume

5. CAV B-50 Series
Pressure Independent Constant Air Volume

6. VAV B-60 Series
Pressure Independent Fan Powered VAVs for
Special Applications Variable Air Volume

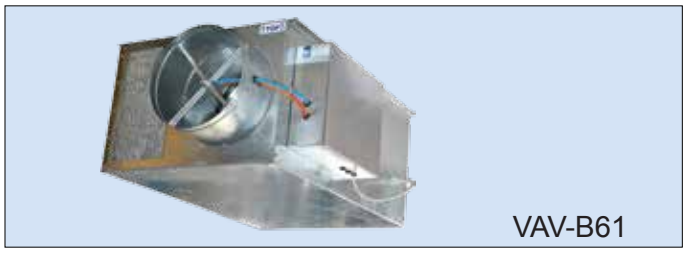

By Pass Type - VAV AHRI Certified

B-10 Series

Model: VAV-B-11x / 12x
11- Top By Pass; 12 - Side By Pass
Construction: Galvanized Steel (GI)
Application: Light & Medium Duty

By-Pass VAV Model VAV-B-11/12, is a device that receives a constant volume of air into the unit and provides variable volume of air to the space. It diverts a portion of the supply airflow to the plenum either through a duct to the return ductwork or directly into a return air plenum.

VAV responds to the thermostat demand for cooling by varying the position of the unit damper, which in turn controls the amount of air entering a zone. At reduced zone loads, cool primary air is returned to the air handler via the plenum or return air duct without experiencing zone heat gains. The lower return air temperature allows the air handler to operate more efficiently.

Standard construction

Casing
0.9 mm thick galvanized sheet steel.
Insulation
13 mm thick 32 kg/m^3 density Acoustic liner.
Blade
0.9 mm thick galvanized sheet steel.
Axle Shaft
12 mm diameter damper shaft made of galvanized steel.
Bearing
12 mm diameter Brass.
Gasket
Neoprene Gasket.
Controls
Modulating / On-Off.

Optional Construction

Controls
Backnet DDC with suitable thermostat.
Sound Attenuator
VAV with additional length insulated casing for sound attenuation.
Insulation
25 mm thick 32 kg/m^3 density Acoustic liner.
Blade
0.9 mm thick aluminium extruded aerofoil multiple blades.
Duct Heater
Slip-in type electric duct heater (230V AC 1 Phase or 400V AC 3 Phase)
Double skin
Insulated internal walls surface with Galvanized perforated sheet used for low noise applications to minimise breakout noise.
Neck connections
Round inlet with round outlet and square inlet with square outlet.

VAV-B-11F

Technical Features:

- AHRI Certified.
- Test Conducted at minimum static pressure at 100% of standard airflow.
- Full range of control of variable air volume supply from 0 to 100% is possible to the conditioned zone.
- A minimum air volume set in terms of percentage (20%) can be provided if required, field adjustment is also possible.
- Low Leakage i.e. less than 2% of V nominal at 750 Pa.
- Designed to produce low NC levels with minimal pressure drop to the system.
- Air volume capacity upto 2800 CFM
- Electronics control factory supply & mounted.
- Variety of control options available, based on applications.
- Electronic thermostat & actuator provide accurate mounting control.
- Metal encapsulated edges limit fiberglass insulation erosion into the airstream.
- Single-point power connection reduces installed cost. Maintenance free.

AHRI Certified By Pass Type - VAV

B - 10 Series

Models : VAV-B-11 / 12 Construction Details and Dimensions

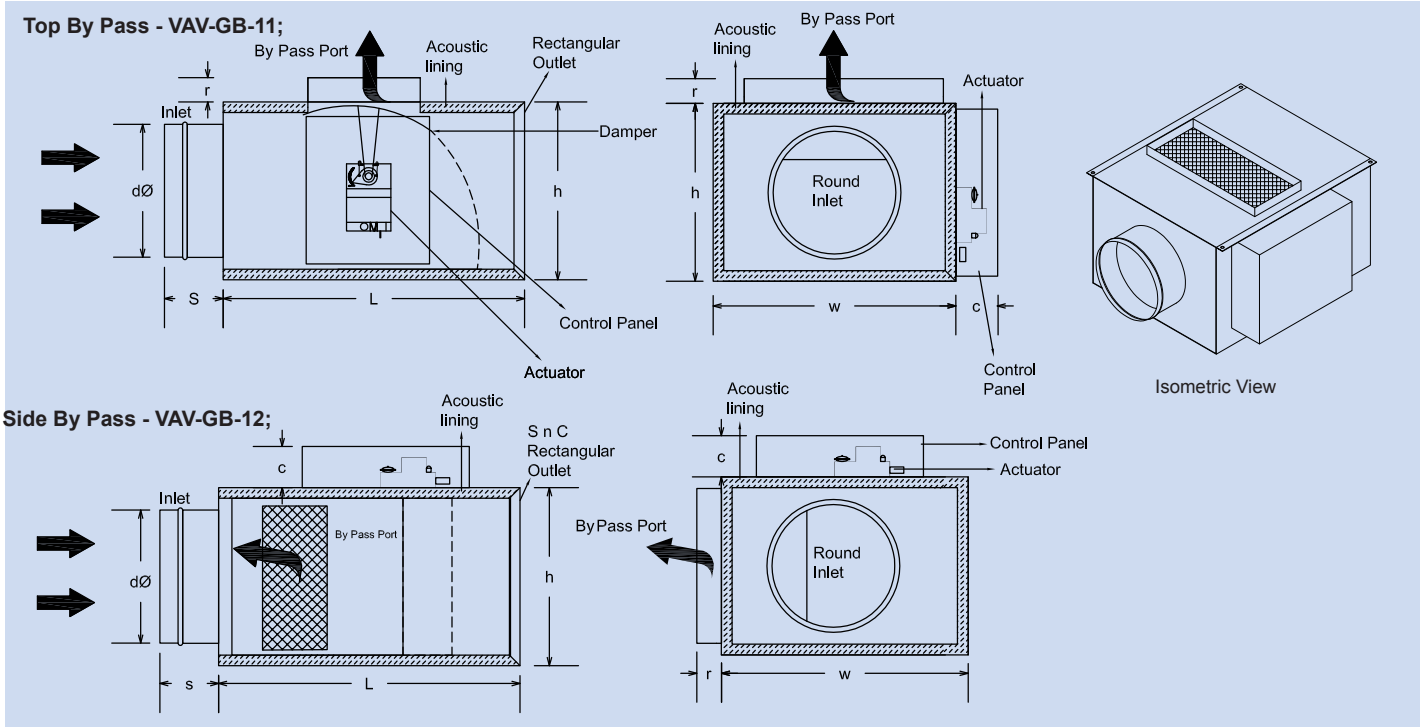

Dimensional data for VAV-B-11/12											
Model (X)	Air Flow Range (cfm)	d inlet(mm)	L (mm)	w 11 (mm)	w 12 (mm)	h (mm)	L+SA (mm)	s (mm)	r (mm)	c (mm)	Thickness of Sheet (Gauge)
A	250	150 ø	400	275	410	200	1000	125	20	80	20g
B	400	150 ø	400	300	550	200	1000	125	20	80	20g
C	550	200 ø	400	325	490	250	1000	125	20	80	20g
D	700	200 ø	400	350	525	250	1000	125	20	80	20g
E	900	250 ø	500	375	575	300	1100	125	20	80	20g
F	1100	250 ø	500	400	600	300	1100	125	20	80	20g
G	1400	300 ø	500	425	650	350	1100	125	20	80	20g
H	1600	300 ø	500	450	700	350	1100	125	20	80	20g
I	2100	350 ø	600	500	800	400	1200	125	20	80	20g
J	2800	350 ø	600	600	900	400	1200	125	20	80	20g

Unit Model	CFM	Minimum Operating pressure (in w.g)	AHRI Standard Ratings - Sound Power Level, dB Re: 1 x 10^{-12} watts											
			Radiated @ 1.5" Water Static Pressure						Discharge @ 1.5" Water Static Pressure					
			Octave Band center frequency (Hz)						Octave Band center frequency (Hz)					
			125	250	500	1000	2000	4000	125	250	500	1000	2000	4000
A	250	0.01	47	39	35	33	24	20	62	59	51	40	31	28
B	400	0.00	51	42	39	37	27	22	57	55	45	34	26	25
C	550	0.02	49	45	43	37	31	23	59	56	48	39	32	25
D	700	0.00	39	32	26	24	20	19	61	57	47	39	33	27
E	900	0.01	49	44	44	39	28	22	61	58	50	40	33	27
F	1100	0.02	52	51	45	41	35	26	59	56	47	38	36	29
G	1400	0.00	50	47	46	39	32	20	62	56	51	45	38	30
H	1600	0.00	53	52	49	44	37	25	59	58	51	43	39	31
I	2100	0.00	50	49	47	37	31	30	61	57	54	41	37	29
J	2800	0.05	58	57	53	42	35	25	83	76	73	65	60	56

Duct end corrections included in sound power levels as per AHRI 880

Selected Products of the company have been Classified / Listed / Tested by various international testing authorities.

AHRI Certified By Pass Type - VAV

B - 10 Series

Engineering and Performance Data

Radiated sound power levels

Unit Size	CFM	M/S	Static Pressure @ 125 Pa							Static Pressure @ 250 Pa							Static Pressure @ 375 Pa							Static Pressure @ 500 Pa						
			125	250	500	1k	2k	4k	NC	125	250	500	1k	2k	4k	NC	125	250	500	1k	2k	4k	NC	125	250	500	1k	2k	4k	NC
A	100	2	22	20	17	17	14	7	<20	30	25	20	18	14	10	<20	35	28	23	19	15	12	<20	36	32	28	20	18	15	<20
	125	4	28	25	20	21	15	11	<20	32	28	23	19	16	12	<20	38	32	28	21	16	13	<20	40	36	30	25	21	18	21
	150	6	31	28	27	24	18	12	<20	35	32	26	22	18	14	<20	40	34	30	28	17	15	21	44	38	31	27	24	20	25
	200	8	36	29	31	27	21	17	<20	38	34	29	25	19	19	<20	44	36	33	31	20	17	25	47	40	34	34	27	21	30
	250	10	39	31	29	25	21	18	<20	43	35	31	29	23	20	22	47	39	35	33	24	20	30	49	43	39	37	29	23	35
B	200	2	23	22	20	16	14	8	<20	32	27	25	21	15	11	<20	44	36	33	31	20	17	25	45	38	35	32	21	18	25
	250	4	29	26	21	19	16	12	<20	36	29	27	23	17	13	<20	46	37	34	33	21	19	27	47	39	37	33	24	20	27
	300	6	35	30	24	23	18	16	<20	38	32	28	28	19	16	<20	47	40	36	34	24	20	29	50	42	38	35	27	21	29
	350	8	27	31	27	28	20	18	<20	42	36	32	29	22	19	21	50	41	38	36	25	21	37	52	44	40	38	31	22	37
	400	10	42	33	31	28	21	19	21	48	38	34	32	23	20	27	51	42	39	37	27	22	39	53	45	41	39	33	26	39
C	250	2	25	21	18	14	12	8	<20	31	27	24	21	18	13	<20	43	41	36	32	25	17	24	46	43	38	31	22	18	29
	300	4	27	23	19	16	14	10	<20	35	31	27	23	20	14	<20	44	43	38	33	26	18	25	48	45	39	34	24	18	30
	350	6	31	26	22	22	17	14	<20	38	36	30	24	22	18	<20	46	45	39	35	28	19	27	49	45	41	36	25	19	32
	400	8	36	29	25	23	18	17	<20	41	37	34	29	24	20	21	47	46	41	36	29	21	30	51	46	44	38	27	20	35
	550	10	42	37	35	31	25	19	21	45	41	39	33	28	21	24	49	45	43	37	32	23	33	52	48	45	39	28	21	37
D	350	2	20	18	17	15	14	12	<20	24	21	16	15	15	13	<20	32	26	21	18	12	14	<20	34	30	23	20	19	19	<20
	400	4	26	20	19	16	14	13	<20	27	23	17	15	15	13	<20	34	28	22	19	13	15	<20	35	31	24	21	20	19	<20
	500	6	29	21	19	17	14	14	<20	29	24	18	16	16	14	<20	36	29	23	21	14	17	<20	37	34	26	23	21	20	<20
	600	8	30	22	20	17	15	14	<20	32	27	20	18	16	14	<20	37	31	24	22	16	18	<20	40	35	28	24	22	21	21
	700	10	32	25	21	19	16	15	<20	35	28	22	20	17	16	<20	39	32	26	24	21	19	<20	42	37	29	27	23	21	22
E	500	2	22	19	18	17	16	13	<20	26	24	20	19	16	14	<20	42	38	37	33	22	16	24	43	39	36	35	27	18	29
	600	4	26	24	20	21	20	15	<20	30	25	26	20	18	15	<20	44	39	39	34	23	17	25	47	40	40	36	28	20	30
	700	6	30	29	27	25	21	17	<20	32	29	34	24	19	17	<20	46	41	41	36	24	19	27	48	42	43	41	30	22	32
	800	8	34	32	30	28	22	17	<20	36	30	36	26	22	18	<20	48	43	43	37	26	21	30	51	45	47	42	32	23	35
	900	10	41	37	36	31	22	18	21	45	41	39	35	26	19	26	49	44	44	39	28	22	33	53	47	49	43	33	25	37
F	700	2	24	21	20	19	17	14	<20	28	26	24	22	18	17	<20	46	47	39	35	28	20	29	47	46	37	36	29	21	29
	800	4	28	24	23	24	23	16	<20	32	30	27	24	22	19	<20	48	48	41	36	29	21	30	49	47	42	38	31	22	30
	900	6	33	32	30	27	25	18	<20	38	34	31	29	27	20	<20	49	49	42	37	31	23	32	50	49	46	41	35	24	32
	1000	8	38	38	32	31	27	19	<20	44	42	38	32	29	21	24	50	50	44	39	33	25	35	52	50	48	44	36	27	35
	1100	10	45	42	37	32	28	19	23	49	47	41	37	31	22	30	52	51	45	41	35	26	37	55	52	49	45	39	29	37
G	1000	2	25	24	22	21	20	15	<20	32	25	23	21	18	18	<20	47	45	40	34	29	15	29	48	46	41	39	31	18	29
	1100	4	31	27	25	23	22	17	<20	33	28	25	23	21	18	<20	47	45	42	36	30	15	30	50	47	43	41	31	18	30
	1200	6	36	32	30	28	25	18	<20	39	32	28	24	22	19	<20	48	46	45	37	30	17	32	51	47	44	41	32	20	32
	1300	8	40	35	32	29	24	18	22	43	37	35	31	25	20	25	49	46	46	38	31	18	35	52	49	47	42	34	21	35
	1400	10	43	39	37	31	25	18	23	47	42	41	36	29	19	30	50	47	46	39	32	20	37	53	50	48	43	35	23	37
H	1000	2	34	32	31	28	22	16	<20	42	40	36	32	26	17	22	47	46	43	37	30	19	29	48	47	45	40	33	21	29
	1150	4	36	34	33	32	26	16	<20	44	41	38	34	28	17	25	49	47	44	39	31	20	30	50	49	45	42	34	23	30
	1300	6	38	37	34	33	27	17	<20	45	43	39	36	31	18	26	50	49	46	40	34	23	32	52	50	47	44	36	26	32
	1450	8	43	39	36	35	29	18	23	48	44	40	38	33	20	30	52	50	47	42	35	24	35	54	52	48	46	38	27	35
	1600	10	45	41	37	36	31	19	26	49	46	42	39	35	21	33	53	52	49	44	37	25	37	56	54	51	48	42	29	40
I	1500	2	37	36	32	28	21	17	<20	40	39	38	29	22	18	21	42	41	41	30	24	20	24	48	48	46	36	32	23	29
	1700	4	38	36	32	28	22	19	<20	41	40	39	30	24	21	21	44	43	42	31	25	26	25	49	49	47	39	32	24	30
	1850	6	41	37	34	29	24	21	21	43	40	40	32	25	22	24	46	45	43	33	28	27	27	51	49	47	41	33	27	32
	2000	8	43	38	35	30	25	21	23	45	42	40	32	27	24	26	47	48	45	36	29	28	30	51	50	49	41	34	30	35
	2100	10	45	39	37	31	26	23	26	48	43	41	34	28	26	30	50	49	47	37	31	30	33	53	50	49	42	34	31	40
J	1800	2	39	38	36	32	23	18	<20	43	41	39	36	26	19	24	45	43	42	35	30	22	27	47	44	42	38	32	21	29
	2000	4	42	39	37	32	23	18	21	44	42	41	37	28	19	25	47	45	47	38	27	22	30	49	46	44	39	35	22	30
	2300	6	46	41	39	33	25	19	26	47	45	45	37	28	20	30	52	50	50	39	31	24	35	53	51	47	43	36	24	35
	2550	8	49	45	41	34	27	19	30	52	47	47	38	30	22	35	55	52	51	41	33	24	38	57	56	52	45	38	26	40
	2800	10	52	48	43	34	28	20	35	55	51	48	39	31	22	40	58	57	53	42	35	25	41	61	59	57	47	39	28	45

Notes:

1. All data are measured in accordance with Industry Standard AHRI 880-2011.
2. All sound power levels, dB re: 10"12 Watts.
3. Data in this column constitute AHRI 880-2011 Standard Rating Conditions
4. Where APs is the inlet static pressure minus discharge static.
5. Application ratings are outside the scope of the certification program.

Selected Products of the company have been Classified / Listed / Tested by various international testing authorities.

AHRI Certified By Pass Type - VAV

B - 10 Series

Engineering and Performance Data

Discharge sound power levels

Unit Size	CFM	M/S	Static Pressure @ 125 Pa							Static Pressure @ 250 Pa							Static Pressure @ 375 Pa							Static Pressure @ 500 Pa						
			125	250	500	1k	2k	4k	NC	125	250	500	1k	2k	4k	NC	125	250	500	1k	2k	4k	NC	125	250	500	1k	2k	4k	NC
A	100	2	35	33	31	25	23	16	<20	38	35	33	27	24	19	<20	42	40	37	31	25	21	22	45	41	40	37	28	23	22
	125	4	38	34	32	26	23	17	<20	42	42	37	29	24	20	30	47	44	39	32	27	22	29	48	46	42	41	31	24	29
	150	6	45	42	36	27	24	17	27	48	46	42	32	27	22	31	51	49	41	35	28	24	33	53	51	48	42	33	28	33
	200	8	51	48	39	30	24	19	33	55	54	45	34	27	23	36	57	55	46	37	29	27	39	59	56	48	44	34	29	39
	250	10	55	51	42	32	25	20	39	58	57	47	36	28	23	40	62	59	51	40	31	28	44	65	61	56	45	36	31	44
B	200	2	36	34	33	25	19	17	<20	41	36	34	28	21	18	24	45	43	42	32	24	22	27	48	46	43	35	24	21	27
	250	4	39	36	34	25	19	17	<20	43	39	35	28	21	18	25	47	44	42	32	25	22	29	50	49	42	35	24	23	29
	300	6	41	38	34	26	20	18	21	47	48	37	29	23	19	29	49	47	43	33	25	23	33	52	52	44	36	26	24	33
	350	8	46	41	35	27	21	19	28	51	49	38	30	23	20	34	53	51	44	34	26	24	36	55	53	47	37	27	24	36
	400	10	51	47	38	27	21	19	33	54	51	42	31	24	21	40	57	55	45	34	26	25	39	59	57	49	37	29	26	39
C	250	2	37	35	34	28	24	18	<20	43	41	37	29	22	19	25	46	44	41	32	29	21	27	47	47	44	39	31	26	27
	300	4	38	37	35	29	24	19	<20	47	43	38	30	24	19	26	47	46	42	34	30	22	30	49	48	47	41	33	26	30
	350	6	42	41	37	30	25	19	22	49	47	40	32	25	20	34	51	49	45	34	30	23	37	53	51	49	43	34	27	37
	400	8	47	44	38	30	25	20	29	51	49	42	34	27	21	33	56	53	47	37	31	24	40	57	56	52	44	36	28	40
	550	10	51	47	39	31	26	20	33	55	51	43	36	28	22	37	59	56	48	39	32	25	43	62	59	53	44	37	29	43
D	350	2	43	41	32	29	23	19	26	46	44	39	31	25	20	27	49	46	43	33	28	22	30	52	49	46	39	32	27	30
	400	4	47	42	32	30	23	20	30	48	45	40	33	26	20	30	51	49	45	34	29	22	37	53	51	47	40	34	28	37
	500	6	50	44	34	31	24	20	34	53	49	41	34	28	21	37	54	51	45	36	32	24	40	57	54	48	41	35	30	40
	600	8	51	45	37	31	25	21	36	55	51	41	36	29	22	40	58	54	46	37	33	25	43	60	56	51	43	37	31	43
	700	10	55	49	38	32	25	21	39	58	53	42	36	29	22	43	61	57	47	39	33	27	45	63	59	52	43	39	31	45
E	500	2	44	42	34	28	23	19	25	47	46	41	33	27	20	27	51	48	44	34	29	23	33	53	50	47	40	33	28	33
	600	4	45	44	35	29	24	19	26	49	47	42	33	28	21	30	52	51	44	35	29	23	35	54	54	49	42	35	28	35
	700	6	49	48	37	31	26	20	31	50	50	44	34	29	21	37	56	54	46	37	30	25	40	57	57	52	42	35	30	40
	800	8	52	50	40	31	26	22	35	54	52	46	36	29	23	40	59	57	49	39	32	25	44	59	60	53	43	36	31	44
	900	10	55	51	42	32	27	22	39	58	55	47	36	31	23	43	61	58	50	40	33	27	46	63	61	55	44	37	31	46
F	700	2	43	41	35	31	24	18	22	44	45	37	29	25	21	25	45	46	42	33	31	25	27	47	44	42	36	34	29	27
	800	4	45	43	36	31	24	19	26	45	46	37	30	28	23	26	48	47	45	34	31	25	30	51	48	44	37	34	31	30
	900	6	49	45	36	32	25	19	31	50	48	39	32	28	25	31	52	50	46	35	33	26	37	54	51	46	41	36	30	37
	1000	8	51	47	38	34	25	21	33	52	50	41	32	30	25	35	55	53	46	37	34	27	40	59	54	49	42	37	31	40
	1100	10	52	48	39	35	26	21	35	55	51	42	33	31	26	39	59	56	47	38	36	29	43	63	59	52	43	39	32	43
G	1000	2	45	43	36	34	26	19	26	46	44	41	35	27	22	26	48	47	43	36	32	26	30	51	49	43	38	36	30	30
	1100	4	47	45	37	36	26	21	29	48	46	43	36	28	22	30	52	49	45	38	34	28	39	53	51	46	39	38	31	39
	1200	6	50	45	39	37	28	21	33	52	48	44	38	32	24	33	57	51	48	41	35	29	40	55	53	49	40	39	32	40
	1300	8	53	47	41	37	30	22	35	55	49	46	40	33	25	35	59	53	50	42	37	29	55	57	56	51	45	41	32	55
	1400	10	54	48	42	38	31	23	39	58	52	47	41	35	26	40	62	56	51	45	38	30	60	65	59	55	49	42	34	60
H	1000	2	43	42	38	32	28	20	24	46	43	42	33	28	23	26	49	45	43	38	33	27	30	47	44	42	41	35	30	30
	1150	4	45	44	41	32	28	21	26	49	47	44	36	29	24	30	43	46	45	41	35	27	37	51	48	43	42	36	30	37
	1300	6	49	47	42	33	29	22	30	51	48	45	37	32	26	33	48	51	48	41	36	28	40	55	53	47	45	39	31	40
	1450	8	51	48	44	33	31	22	33	54	51	45	37	34	26	35	55	57	50	42	38	30	43	59	56	51	46	41	31	43
	1600	10	52	49	45	34	31	24	35	55	53	47	39	35	28	40	59	58	51	43	39	31	45	62	59	53	47	42	33	45
I	1500	2	46	45	43	34	26	19	26	47	46	43	35	29	21	30	51	49	45	35	32	26	33	49	46	44	42	36	31	33
	1700	4	48	46	45	35	26	20	30	51	49	47	36	30	23	39	53	52	47	37	33	26	35	53	47	48	42	37	31	35
	1850	6	51	48	45	36	27	20	33	55	51	49	37	31	23	40	57	54	48	38	35	27	40	55	51	49	43	37	32	40
	2000	8	53	50	47	36	29	22	35	59	52	51	37	31	25	55	59	55	52	40	35	27	44	63	56	53	45	39	33	44
	2100	10	55	51	48	38	29	23	40	58	54	51	38	33	25	60	61	57	54	41	37	29	46	64	60	57	45	41	33	46
J	1800	2	48	45	42	38	36	22	30	56	55	56	42	35	27	40	59	56	48	45	37	32	45	60	54	48	44	42	38	45
	2000	4	55	52	48	41	42	28	39	61	59	58	46	42	35	45	64	63	53	53	45	41	50	64	61	55	49	47	41	50
	2300	6	63	59	52	48	45	35	40	67	65	62	52	48	39	50	73	68	59	57	49	46	55	72	68	63	56	52	48	55
	2550	8	69	64	61	55	51	39	55	74	69	65	57	51	45	56	78	71	65	62	55	52	60	79	71	68	61	58	55	60
	2800	10	75	68	63	59	53	46	60	79	71	69	61	56	49	63	83	76	73	65	60	56	65	85	78	74	68	63	59	65

Notes:

1. All data are measured in accordance with Industry Standard AHRI 880-2011.
2. All sound power levels, dB re: 10"12 Watts.
3. Data in this column constitute AHRI 880-2011 Standard Rating Conditions
4. Where APs is the inlet static pressure minus discharge static.
5. Application ratings are outside the scope of the certification program.

Selected Products of the company have been Classified / Listed / Tested by various international testing authorities.

Pressure Dependent Type - VAV

B-20 Series

Model: VAV-GB- 21x / 22x
21- Rectangular Type ; 22 - Round Type
Construction: Galvanized Steel (GI)
Application: Light & Medium Duty

In Pressure Dependent VAV Model VAV-GB-21/22 , the room thermostat modulates the VAV box damper directly to control the space temperature. This requires that the duct static pressure be maintained at designated levels so that enough air pressure is available to cool the room.

The terminal unit damper is positioned from a signal sent directly from the zone thermostat to the damper actuator without regard for system conditions. In a pressure dependent system, two zones on the same system are effected by the control of one another.

Standard construction

Casing
0.9 mm thick galvanized sheet steel.
Insulation
13 mm thick 32 kg/m^3 density Acoustic liner.
Blade
0.9 mm thick galvanized sheet steel.
Axle Shaft
12 mm diameter axle shaft made of galvanized steel.
Bearings
12 mm diameter Brass bearings.
Gasket
Neoprene Gasket.
Controls
Modulating.

Optional Construction

Controls
Backnet DDC with suitable thermostat.
Sound Attenuator
VAV with additional length insulated casing for sound attenuation.
Insulation
25 mm thick 32 kg/m^3 density Acoustic liner.
Blade
0.9 mm thick aluminium extruded aerofoil multiple blades.
Duct Heater
Slip-in type electric duct heater (230V AC 1 Phase or 400V AC 3 Phase). .
Double skin
Insulated internal walls surface with Galvanized perforated sheet used for low noise applications to minimise breakout noise.
Neck connections
Round inlet with round outlet and square inlet with square outlet.

VAV-GB-21E

Technical Features:

- Volume control range from 100 to 0% is possible to the conditioned zone.
- A minimum air volume set in terms of percentage (20%) can be provided if required, field adjustment is also
- possible.
- Low Leakage i.e. less than 2% of V nominal at 750 Pa.
- Designed to produce low NC levels with minimal pressure drop to the system.
- Air volume capacity upto 2800 CFM
- Electronics control factory supply & mounted.
- Variety of control options available, based on applications.
- Electronic thermostat & actuator provide accurate mounting control.
- Metal encapsulated edges limit fiberglass insulation erosion into the airstream.
- Single-point power connection reduces installed cost. Maintenance free.

Pressure Dependent Type - VAV

B-20 Series

Models: VAV-GB-21 Construction Details and Dimensions

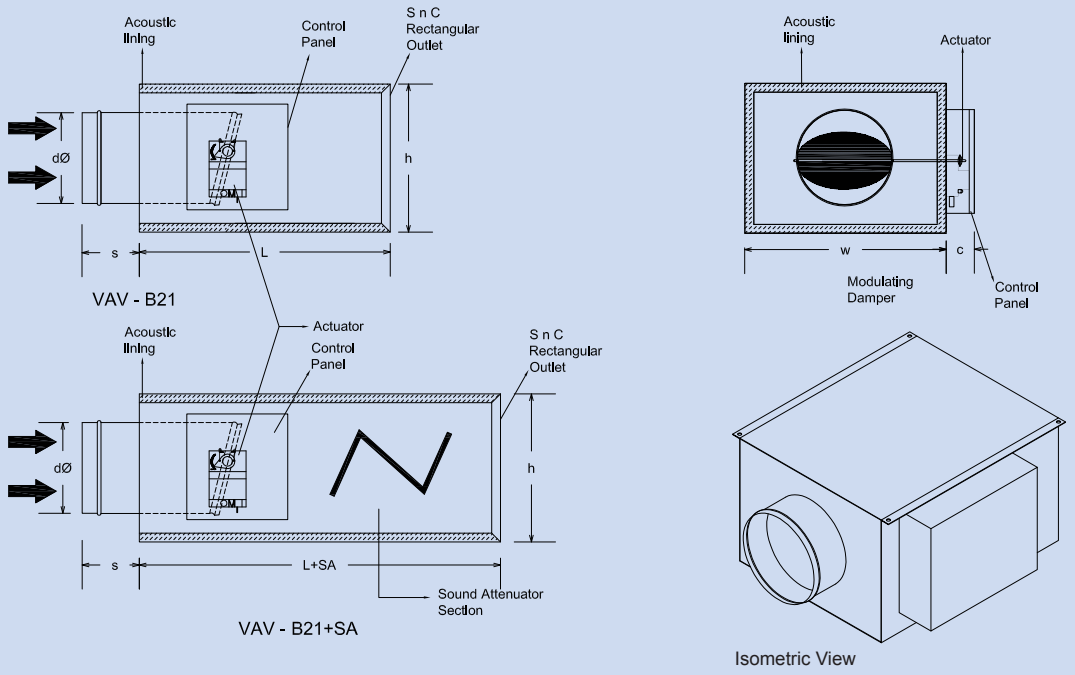

Dimensional data for VAV-GB-21									
Model (X)	Air Flow Range (cfm)	d inlet(mm)	L (mm)	w (mm)	h (mm)	L+SA (mm)	s (mm)	c (mm)	Thickness of Sheet (Gauge)
A	250	150 ø	400	275	200	1000	125	80	20g
B	400	150 ø	400	300	200	1000	125	80	20g
C	550	200 ø	400	325	250	1000	125	80	20g
D	700	200 ø	400	350	250	1000	125	80	20g
E	900	250 ø	500	375	300	1100	125	80	20g
F	1100	250 ø	500	400	300	1100	125	80	20g
G	1400	300 ø	500	425	350	1100	125	80	20g
H	1600	300 ø	500	450	350	1100	125	80	20g
I	2100	350 ø	600	500	400	1200	125	80	20g
J	2800	350 ø	600	600	400	1200	125	80	20g

Pressure Dependent Type - VAV

B-20 Series

Round VAV Models: VAV-GB-22; Construction Details and Dimensions

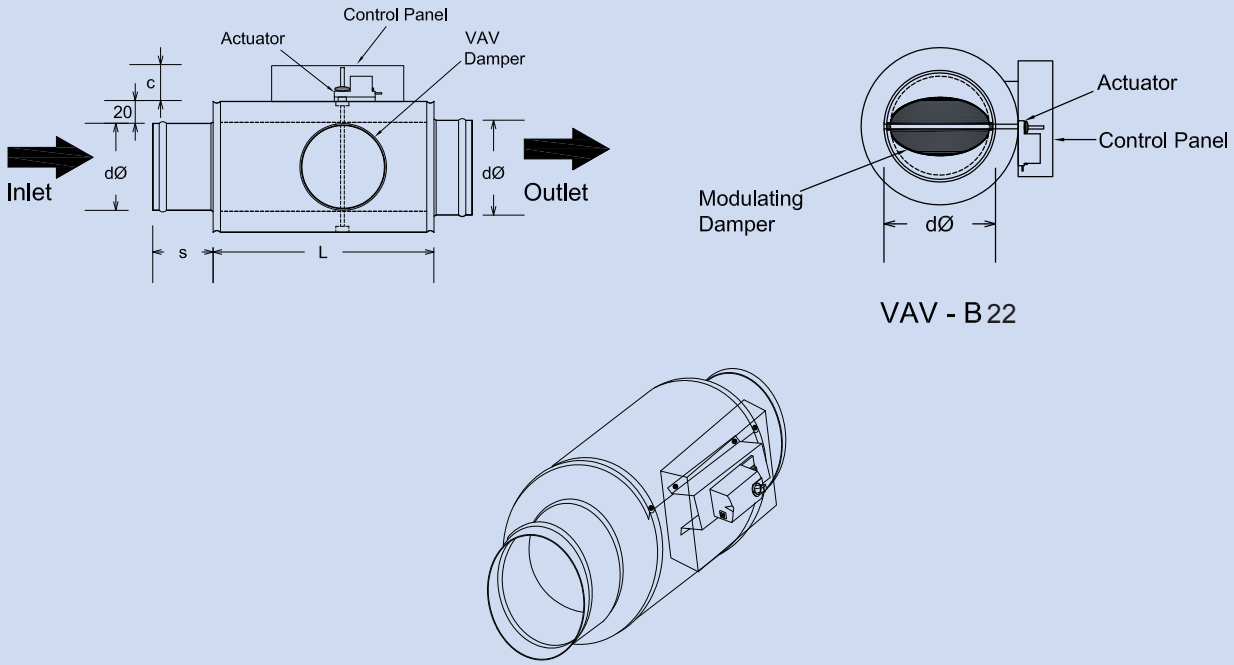

Dimensional data for VAV-GB-22							
Model (X)	Air Flow Range (cfm)	22 d-inlet(mm)	22 d-outer(mm)	L (mm)	s (mm)	c (mm)	Thickness of Sheet (Gauge)
A	400	150 ø	200 ø	400	125	80	20g
B	700	200 ø	250 ø	400	125	80	20g
C	1100	250 ø	300 ø	400	125	80	20g
D	1600	300 ø	350 ø	400	125	80	20g
E	2100	350 ø	400 ø	500	125	80	20g
F	2800	400 ø	450 ø	500	125	80	20g

Selected Products of the company have been Classified / Listed / Tested by various international testing authorities.
Globally Recognized. Industry Respected.

Pressure Dependent Type - VAV

B-20 Series

Engineering and Performance Data

Radiated sound power levels

Unit Model	CFM	M/S	Static Pressure @ 125 Pa							Static Pressure @ 250 Pa							Static Pressure @ 375 Pa							Static Pressure @ 500 Pa						
			125	250	500	1k	2k	4k	NC	125	250	500	1k	2k	4k	NC	125	250	500	1k	2k	4k	NC	125	250	500	1k	2k	4k	NC
A	100	2	35	34	31	27	23	17	<20	38	36	35	33	26	18	<20	40	38	35	34	28	19	<20	43	41	40	36	34	17	<20
	125	4	43	41	37	33	25	19	<20	43	42	39	36	28	22	25	46	42	36	38	29	23	<20	52	44	43	38	36	22	23
	150	6	47	43	41	35	26	21	26	49	47	43	39	29	23	33	52	46	42	40	32	27	28	56	51	47	41	37	26	34
	200	8	51	47	43	37	28	22	31	56	53	45	40	31	25	46	59	55	48	43	33	30	34	62	57	52	44	39	31	46
	250	10	57	54	44	38	29	24	40	61	57	48	41	32	26	57	65	60	52	44	36	32	49	69	63	56	47	40	36	59
B	200	2	42	36	35	28	22	16	<20	44	37	36	34	20	17	<20	45	43	37	35	22	18	<20	47	44	42	35	24	16	<20
	250	4	48	41	38	29	22	16	21	50	42	40	35	21	17	30	49	47	41	36	24	19	23	53	49	46	37	27	19	30
	300	6	53	44	43	31	23	17	25	54	46	43	35	23	18	40	57	55	46	38	25	19	34	59	54	48	41	28	21	40
	350	8	58	47	44	33	24	19	30	61	51	46	37	23	19	49	63	57	49	40	27	21	46	67	58	52	43	30	24	49
	400	10	62	52	47	35	25	20	41	66	56	49	38	25	20	58	70	61	53	41	28	22	59	73	64	57	44	31	25	58
C	250	2	43	38	36	32	24	18	<20	42	41	39	36	26	22	25	44	42	38	36	31	21	21	46	43	37	35	34	29	25
	300	4	47	42	39	34	28	22	<20	48	44	43	37	29	24	30	48	44	41	39	33	25	33	52	49	43	41	36	32	30
	350	6	54	47	44	37	27	24	24	56	51	46	41	32	27	39	55	53	47	43	37	28	45	59	53	54	46	39	35	39
	400	8	57	53	48	41	31	27	30	61	58	52	44	36	30	46	62	56	52	46	39	31	58	64	61	57	51	43	36	46
	550	10	62	58	51	42	33	28	36	65	61	54	45	38	32	57	68	63	57	49	41	36	64	71	67	61	54	45	39	57
D	350	2	38	36	32	27	22	19	<20	40	38	35	30	27	23	21	43	42	37	34	28	24	<20	44	43	41	34	32	26	21
	400	4	42	38	36	28	23	20	25	46	42	37	32	27	25	26	46	46	41	36	29	28	25	47	46	44	37	33	29	26
	500	6	47	43	39	30	25	22	35	49	47	42	35	29	28	33	52	49	45	37	30	29	35	53	51	47	39	35	33	33
	600	8	51	45	42	33	28	23	40	55	49	46	37	31	30	40	57	51	48	40	33	32	40	58	55	51	41	36	37	40
	700	10	56	49	43	36	29	24	46	58	51	48	39	32	31	49	60	55	52	41	34	35	46	64	59	54	46	38	39	49
E	500	2	44	41	35	33	28	19	<20	46	43	41	31	29	23	<20	47	44	43	40	32	29	<20	48	47	44	42	36	30	<20
	600	4	47	43	38	34	30	21	<20	51	48	44	35	33	27	28	53	49	48	42	36	31	<20	54	52	49	46	39	34	28
	700	6	51	47	43	37	32	25	30	56	52	47	37	36	28	34	57	52	51	45	39	34	30	59	56	51	49	42	36	34
	800	8	57	50	45	39	35	27	35	61	53	49	43	39	31	43	63	57	53	48	41	36	35	66	59	54	51	46	39	43
	900	10	62	51	47	41	39	28	43	65	56	51	47	42	33	58	69	60	56	51	45	40	43	72	65	59	54	48	43	58
F	700	2	42	43	40	35	32	20	25	44	42	41	39	32	26	30	46	44	43	40	38	28	25	47	45	43	42	36	30	30
	800	4	46	46	43	38	34	24	35	49	45	45	42	35	27	35	50	49	46	45	43	34	35	55	49	48	46	41	37	35
	900	6	51	50	47	41	37	29	40	54	51	49	46	39	31	45	56	53	52	51	47	39	40	61	54	51	49	46	43	45
	1000	8	56	54	51	46	41	35	50	60	57	52	49	43	38	50	65	57	56	56	51	44	50	68	61	57	55	52	49	50
	1100	10	62	57	53	51	43	38	60	65	61	58	54	49	45	57	71	66	62	60	54	52	60	75	69	64	61	57	54	57
G	1000	2	44	42	38	31	24	20	21	47	43	41	35	24	23	24	44	43	38	36	26	24	21	47	44	43	36	29	24	21
	1100	4	49	47	39	33	24	22	26	52	48	45	36	24	23	30	49	47	41	38	29	26	26	52	49	46	39	31	27	26
	1200	6	51	49	41	34	25	23	33	55	52	48	38	26	25	34	54	51	45	39	30	27	33	60	54	50	42	34	29	33
	1300	8	57	52	45	37	26	24	40	61	57	49	40	28	26	40	61	56	51	41	33	27	40	67	61	55	45	37	30	40
	1400	10	63	56	48	39	27	26	49	65	59	51	41	29	27	46	69	62	56	43	35	29	49	72	65	59	47	38	33	49
H	1000	2	38	36	34	28	26	20	24	40	36	35	32	27	21	21	41	39	36	33	29	22	24	43	41	39	35	32	22	<20
	1150	4	43	41	36	28	26	20	30	45	44	40	33	29	23	26	46	45	43	37	32	26	30	48	46	45	38	34	25	21
	1300	6	47	46	39	29	27	21	34	51	47	43	35	30	23	33	51	51	45	40	33	28	34	55	51	51	41	37	28	25
	1450	8	52	49	43	31	27	23	40	56	53	46	37	31	24	40	57	54	48	43	36	29	40	62	57	54	44	40	32	30
	1600	10	58	51	44	33	29	23	46	61	54	49	38	33	25	49	64	58	52	44	38	32	46	69	62	56	49	42	36	41
I	1500	2	45	43	32	32	24	21	27	47	44	38	34	27	22	<20	44	41	38	34	29	23	27	45	43	38	35	30	23	<20
	1700	4	49	46	35	33	26	23	35	51	49	41	36	29	23	29	51	43	41	36	33	24	35	52	50	41	37	33	26	<20
	1850	6	53	49	37	35	27	24	40	55	52	45	39	32	25	34	58	47	45	39	34	27	40	59	57	47	41	36	28	24
	2000	8	59	53	41	36	30	24	48	61	55	46	40	34	26	48	64	55	48	41	37	28	48	66	62	51	45	39	31	30
	2100	10	64	55	43	38	31	26	55	67	59	49	41	35	28	60	71	63	53	45	39	30	55	73	67	58	48	41	33	36
J	1800	2	46	44	41	35	27	22	30	48	45	44	36	29	23	<20	49	48	45	38	36	28	30	50	49	47	41	35	29	<20
	2000	4	49	47	43	36	29	23	35	53	50	48	38	31	25	25	54	53	50	40	38	31	35	56	54	52	44	38	32	25
	2300	6	53	52	45	38	31	25	45	56	54	51	41	34	28	35	59	58	53	44	39	34	45	62	59	57	49	41	35	35
	2550	8	59	57	49	40	32	28	50	62	58	54	45	26	30	40	65	62	56	48	42	36	50	68	65	63	52	44	36	40
	2800	10	65	61	53	41	33	29	57	69	65	56	47	38	32	46	72	68	60	51	43	37	57	75	71	65	54	48	39	46

Notes:

1. All data are measured in accordance with Industry Standard AHRI 880-2011.
2. All sound power levels, dB re: 10"12 Watts.
3. Data in this column constitute AHRI 880-2011 Standard Rating Conditions
4. Where APs is the inlet static pressure minus discharge static.
5. Application ratings are outside the scope of the certification program.

Selected Products of the company have been Classified / Listed / Tested by various international testing authorities.

Globally Recognized. Industry Respected.

Pressure Dependent Type - VAV

B-20 Series

Engineering and Performance Data

Discharge Sound power Levels

Unit Size	CFM	M/S	Static Pressure @ 125 Pa							Static Pressure @ 250 Pa							Static Pressure @ 375 Pa							Static Pressure @ 500 Pa						
			125	250	500	1k	2k	4k	NC	125	250	500	1k	2k	4k	NC	125	250	500	1k	2k	4k	NC	125	250	500	1k	2k	4k	NC
A	100	2	44	42	38	37	32	26	<20	45	43	40	38	36	29	<20	48	46	43	39	38	31	<20	51	48	46	42	35	32	<20
	125	4	51	50	46	42	34	30	<20	52	50	46	44	39	33	25	54	51	47	44	41	35	<20	55	52	51	46	39	37	23
	150	6	59	57	51	46	37	33	26	60	58	52	48	41	36	33	63	60	56	50	43	40	28	64	61	60	54	43	43	34
	200	8	66	65	57	49	39	37	31	67	66	59	52	44	39	46	71	69	62	55	46	44	34	71	68	68	58	48	47	46
	250	10	71	70	62	51	42	39	40	75	74	66	55	46	44	57	79	77	70	58	50	48	49	82	79	74	62	54	51	59
B	200	2	45	43	39	38	33	27	<20	46	45	43	40	38	31	<20	49	47	45	43	39	32	<20	52	49	46	44	36	33	<20
	250	4	53	51	43	43	35	33	21	53	54	52	44	40	34	30	56	54	52	49	42	36	23	56	57	53	49	41	35	30
	300	6	61	58	48	47	39	36	25	60	62	57	47	43	38	40	64	63	59	52	46	39	34	66	63	59	55	46	38	40
	350	8	68	66	54	50	41	39	30	68	68	61	52	46	41	49	72	70	63	56	48	44	46	70	70	66	59	49	40	49
	400	10	72	69	61	54	43	41	41	75	73	65	57	48	45	58	80	78	68	59	51	49	59	82	79	72	64	56	43	58
C	250	2	41	42	38	36	32	28	<20	44	42	39	37	35	33	25	46	43	38	37	35	30	21	47	45	42	40	37	34	25
	300	4	48	46	41	38	35	31	<20	47	44	43	40	37	35	30	53	47	42	44	38	35	33	54	50	49	44	43	38	30
	350	6	52	51	45	41	37	34	24	54	52	48	43	40	36	39	59	55	49	47	41	39	45	61	56	55	49	45	41	39
	400	8	58	57	48	45	40	37	30	60	59	54	47	42	38	46	65	61	56	53	46	43	58	68	63	61	54	49	45	46
	550	10	65	61	53	49	41	39	36	68	65	58	51	45	42	57	71	68	63	55	49	46	64	74	71	67	59	53	49	57
D	350	2	46	43	41	37	34	29	<20	47	45	43	40	38	34	21	49	46	42	41	39	32	<20	50	48	46	42	40	35	21
	400	4	54	52	44	41	37	32	25	55	49	48	43	40	37	26	57	54	47	46	42	36	25	59	56	54	46	44	39	26
	500	6	63	58	49	47	41	35	35	64	57	55	48	46	38	33	68	62	55	53	46	41	35	67	64	63	55	52	41	33
	600	8	69	64	55	53	45	37	40	71	66	59	54	49	42	40	74	68	61	58	51	46	40	76	71	67	59	55	48	40
	700	10	75	70	61	57	46	40	46	79	71	64	59	51	46	49	82	75	69	62	55	50	46	84	79	73	66	58	52	49
E	500	2	44	42	39	35	33	27	<20	46	43	41	38	35	32	<20	51	46	42	39	35	33	<20	52	50	46	43	38	34	<20
	600	4	51	47	42	38	36	32	<20	53	48	46	42	39	36	28	56	51	47	41	38	37	<20	57	54	52	48	43	37	28
	700	6	58	55	49	43	39	36	30	61	58	53	47	43	39	34	63	57	58	48	45	41	30	65	63	58	55	47	42	34
	800	8	65	59	53	47	43	39	35	67	62	59	51	47	43	43	76	64	63	54	51	48	35	77	74	65	59	56	49	43
	900	10	72	65	59	51	48	43	43	75	69	63	55	52	47	58	82	72	67	60	56	52	43	82	75	70	65	59	53	58
F	700	2	45	44	41	36	34	29	25	47	45	43	40	35	30	30	50	46	44	42	38	35	25	54	48	45	42	39	36	30
	800	4	53	51	46	39	36	30	35	55	52	50	44	38	34	35	56	54	51	45	43	37	35	61	55	53	47	43	42	35
	900	6	59	56	50	43	39	33	40	61	58	54	48	41	37	45	66	59	56	49	46	42	40	69	62	57	51	48	44	45
	1000	8	66	60	55	47	42	37	50	68	65	57	52	45	41	50	73	67	61	54	51	47	50	76	69	63	56	52	49	50
	1100	10	72	65	58	51	45	39	60	75	69	61	54	49	43	57	81	72	66	59	54	51	60	84	74	68	63	57	54	57
G	1000	2	46	45	42	37	35	31	21	47	44	43	41	36	32	24	51	48	46	44	39	35	21	53	49	47	43	39	37	21
	1100	4	51	50	47	40	38	34	26	55	51	49	46	41	36	30	56	53	50	49	43	39	26	61	55	54	51	43	42	26
	1200	6	61	57	51	43	42	38	33	64	58	56	50	46	40	34	66	59	56	53	47	44	33	68	63	60	55	48	48	33
	1300	8	68	62	57	48	45	41	40	72	65	59	54	49	43	40	74	64	63	57	54	49	40	75	70	65	61	56	53	40
	1400	10	75	69	61	52	49	42	49	78	71	65	57	52	48	46	81	74	69	61	58	55	49	83	78	71	66	61	58	49
H	1000	2	44	43	40	38	34	31	24	45	43	42	38	34	30	21	47	44	43	42	38	34	24	50	48	45	41	38	36	<20
	1150	4	47	46	43	41	36	33	30	53	49	45	43	36	34	26	56	51	50	45	41	36	30	57	55	50	46	42	39	21
	1300	6	54	52	48	45	39	36	34	59	55	51	47	40	38	33	61	58	54	48	46	40	34	64	60	57	49	47	45	25
	1450	8	59	58	52	48	41	39	40	64	61	57	51	45	39	40	69	65	59	53	49	46	40	72	68	63	55	52	49	30
	1600	10	69	63	58	53	43	41	46	72	68	64	55	49	45	49	77	71	67	59	55	52	46	80	75	69	63	59	54	41
I	1500	2	46	44	41	38	35	32	27	47	45	43	39	36	32	>20	48	46	44	43	40	35	27	52	50	46	44	41	37	<20
	1700	4	52	47	44	41	37	34	35	54	51	46	42	38	35	29	59	53	50	47	43	38	35	61	56	51	49	42	40	<20
	1850	6	59	55	48	44	39	37	40	61	58	54	47	41	36	34	66	60	57	52	48	42	40	68	62	57	53	47	44	24
	2000	8	67	62	55	48	43	39	48	69	66	59	51	46	48	48	73	58	63	57	52	47	48	74	68	63	58	51	50	30
	2100	10	72	67	61	52	46	42	55	75	71	65	57	51	59	60	80	73	68	61	55	52	55	82	76	71	66	58	54	36
J	1800	2	47	44	43	41	37	33	30	48	47	45	40	37	33	>20	51	49	47	44	39	31	30	53	50	48	45	42	38	<20
	2000	4	53	49	46	44	39	35	35	56	52	49	46	41	37	25	58	55	51	48	43	36	35	59	57	55	50	48	42	25
	2300	6	61	56	54	49	42	39	45	64	60	56	49	46	41	35	67	61	58	54	47	45	45	68	65	64	56	53	47	35
	2550	8	68	61	59	52	45	41	50	73	66	61	54	50	46	40	75	68	65	59	53	51	50	76	72	69	63	58	52	40
	2800	10	75	68	65	58	49	45	57	79	72	69	62	56	51	46	83	76	73	65	60	57	57	84	79	75	69	63	59	46

Notes:

1. All data are measured in accordance with Industry Standard AHRI 880-2011.
2. All sound power levels, dB re: 10"12 Watts.
3. Data in this column constitute AHRI 880-2011 Standard Rating Conditions
4. Where APs is the inlet static pressure minus discharge static.
5. Application ratings are outside the scope of the certification program.

Selected Products of the company have been Classified / Listed / Tested by various international testing authorities.

Globally Recognized. Industry Respected.

Pressure Independent Type - AHRI Certified VAV

B-30 Series

Model: VAV-B- 31x / 32x
31- Rectangular Type; 32 - Round Type
Construction: Galvanized Steel (GI)
Application: Light & Medium Duty

In PRESSURE INDEPENDENT Model VAV-B-31/32 The room thermostat increases or decreases the amount of CFM that the room receives based upon the zone temperature. A CFM controller modulates the VAV box damper to maintain the desired CFM setting as set by the thermostat. Temperature is controlled indirectly from the amount of cool air, the box allows to enter the room. This means that no matter what the pressure is in the duct (as long as there is some minimum amount) the box damper will open and close to meet the CFM requirement. This makes the VAV box independent of duct pressure.

The pressure independent control options also monitor and respond to the velocity of the air flow, generally at the inlet of the unit.

Standard construction

Casing
0.9 mm thick galvanized sheet steel.

Insulation
13 mm thick 32 kg/m^3 density Acoustic liner.

Blade
0.9 mm thick galvanized sheet steel.

Flow grid
Flow grid multi point with 12 inlet holes in four concentric circles.

Axle Shaft
12 mm diameter axle shaft made of galvanized steel.

Bearings :
12 mm diameter Brass bearings.

Gasket
Neoprene Gasket.

Controls
Modulating.

Optional Construction

Controls
Backnet DDC with suitable thermostat.

Sound Attenuator
VAV with additional length insulated casing for sound attenuation.

Insulation
25 mm thick 32 kg/m^3 density Acoustic liner.

Blade
0.9 mm thick aluminium extruded aerofoil multiple blades.

Duct Heater
Slip-in type electric duct heater (230V AC 1 Phase or 400V AC 3 Phase)

Double skin
Insulated internal walls surface with Galvanized perforated sheet used for low noise applications to minimise breakout noise.

Neck connections
Round inlet with round outlet and square inlet with square outlet

VAV-B-31F

Technical Features:

- AHRI Certified.
- Test Conducted at minimum static pressure at 100% of standard airflow.
- Volume control range from 100 to 10% is possible to the conditioned zone.
- Accurate airflow sensing with 2 X 12 points averaging.
- Low Leakage i.e. less than 2% of V nominal at 750 Pa.
- Designed to produce low NC levels with minimal pressure drop to the system.
- Suitable for use as constant volume application,it can maintain a set flow requirement, compensating for fluctuations in system pressure.
- Suitable for single duct variable volume control
- Air volume capacity upto 2800 CFM
- Electronics control factory supply & mounted.
- Variety of control options available, based on applications.
- Electronic thermostat & actuator provide accurate mounting control.
- Metal encapsulated edges limit fiberglass insulation erosion into the airstream.
- Single-point power connection reduces installed cost. Maintenance free.

Pressure Independent Type - AHRI Certified VAV

B-30 Series

Models : VAV-B-31 Construction Details and Dimensions

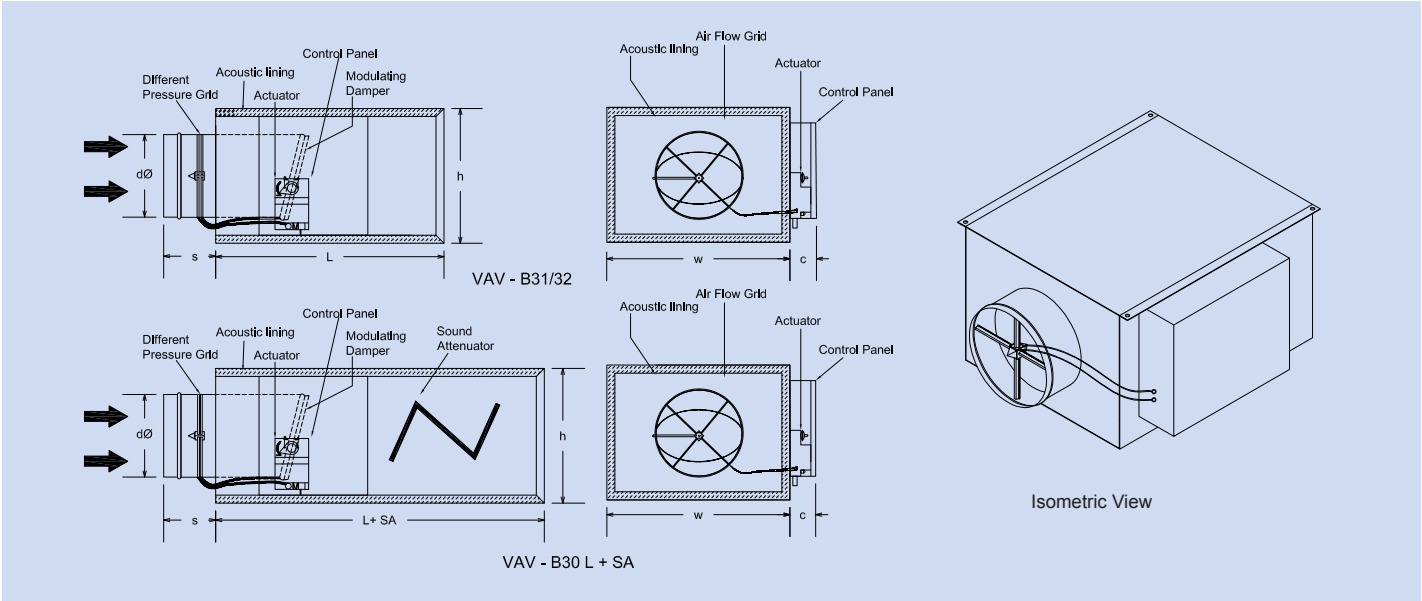

Dimensional data for VAV B 31									
Model (X)	Air Flow Range (cfm)	d inlet(mm)	L (mm)	w (mm)	h (mm)	L+SA (mm)	s (mm)	c (mm)	Thickness of Sheet (Gauge)
A	250	150 ø	400	275	200	1000	100	80	20g
B	400	150 ø	400	300	200	1000	100	80	20g
C	550	200 ø	400	325	250	1000	100	80	20g
D	700	200 ø	400	350	250	1000	125	80	20g
E	900	250 ø	500	375	300	1100	125	80	20g
F	1100	250 ø	500	400	300	1100	125	80	20g
G	1400	300 ø	500	425	350	1100	125	80	20g
H	1600	300 ø	500	450	350	1100	150	80	20g
I	2100	350 ø	600	500	400	1200	150	80	20g
J	2800	350 ø	600	600	400	1200	150	80	20g

Unit Model	CFM	Minimum Operating pressure (In W.g)	AHRI Standard Ratings - Sound Power Level, dB Re: 1 x 10 $^{-12}$ watts											
			Radiated@1.5" Water Static Pressure						Discharge@1.5" Water Static Pressure					
			Hz Octave Band center frequency						Hz Octave Band center frequency					
			125	250	500	1000	2000	4000	125	250	500	1000	2000	4000
A	250	0.05	65	60	52	44	36	32	79	77	70	58	50	48
B	400	0.05	70	61	53	41	28	22	80	78	68	59	51	49
C	550	0.01	68	63	57	49	41	36	71	68	63	55	49	46
D	700	0.04	60	55	52	41	34	35	82	75	69	62	55	50
E	900	0.00	69	60	56	51	45	40	80	72	67	60	56	52
F	1100	0.01	71	66	62	60	54	52	81	72	66	59	54	51
G	1400	0.03	69	62	56	43	35	29	81	74	69	61	58	55
H	1600	0.00	64	58	52	44	38	32	77	71	67	59	55	52
I	2100	0.02	71	63	53	45	39	30	80	73	68	61	55	22
J	2800	0.02	72	68	60	51	43	37	83	76	73	65	60	57

Duct end corrections included in sound power levels as per AHRI 880

Selected Products of the company have been Classified / Listed / Tested by various international testing authorities.

Pressure Independent Type - AHRI Certified VAV

B-30 Series

Round VAV Models : VAV-B-32; Construction Details and Dimensions

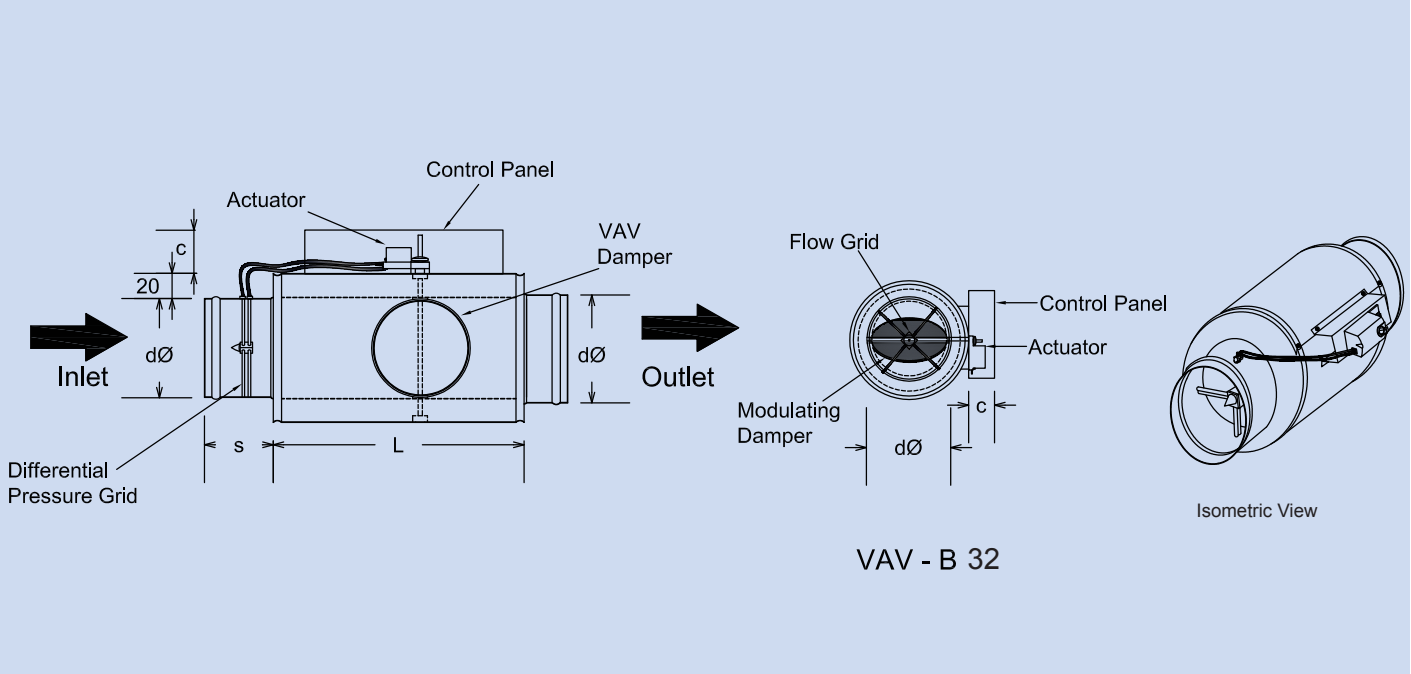

Dimensional data for VAV-B-33							
Model (X)	Air Flow Range (cfm)	32 d-inlet(mm)	32 d-outer(mm)	L (mm)	s (mm)	c (mm)	Thickness of Sheet (Gauge)
A	400	150 ø	200 ø	400	125	80	20g
B	700	200 ø	250 ø	400	125	80	20g
C	1100	250 ø	300 ø	400	125	80	20g
D	1600	300 ø	350 ø	400	125	80	20g
E	2100	350 ø	400 ø	500	125	80	20g
F	2800	400 ø	450 ø	500	125	80	20g

Pressure Independent Type - AHRI Certified VAV

B-30 Series

Engineering and Performance Data

Radiated sound power levels

Unit Model	CFM	M/S	Static Pressure @ 125 Pa							Static Pressure @ 250 Pa							Static Pressure @ 375 Pa							Static Pressure @ 500 Pa						
			125	250	500	1k	2k	4k	NC	125	250	500	1k	2k	4k	NC	125	250	500	1k	2k	4k	NC	125	250	500	1k	2k	4k	NC
A	100	2	35	34	31	27	23	17	<20	38	36	35	33	26	18	<20	40	38	35	34	28	19	<20	43	41	40	36	34	17	<20
	125	4	43	41	37	33	25	19	<20	43	42	39	36	28	22	25	46	42	36	38	29	23	<20	52	44	43	38	36	22	23
	150	6	47	43	41	35	26	21	26	49	47	43	39	29	23	33	52	46	42	40	32	27	28	56	51	47	41	37	26	34
	200	8	51	47	43	37	28	22	31	56	53	45	40	31	25	46	59	55	48	43	33	30	34	62	57	52	44	39	31	46
	250	10	57	54	44	38	29	24	40	61	57	48	41	32	26	57	65	60	52	44	36	32	49	69	63	56	47	40	36	59
B	200	2	42	36	35	28	22	16	<20	44	37	36	34	20	17	<20	45	43	37	35	22	18	<20	47	44	42	35	24	16	<20
	250	4	48	41	38	29	22	16	21	50	42	40	35	21	17	30	49	47	41	36	24	19	23	53	49	46	37	27	19	30
	300	6	53	44	43	31	23	17	25	54	46	43	35	23	18	40	57	55	46	38	25	19	34	59	54	48	41	28	21	40
	350	8	58	47	44	33	24	19	30	61	51	46	37	23	19	49	63	57	49	40	27	21	46	67	58	52	43	30	24	49
	400	10	62	52	47	35	25	20	41	66	56	49	38	25	20	58	70	61	53	41	28	22	59	73	64	57	44	31	25	58
C	250	2	43	38	36	32	24	18	<20	42	41	39	36	26	22	25	44	42	38	36	31	21	21	46	43	37	35	34	29	25
	300	4	47	42	39	34	28	22	<20	48	44	43	37	29	24	30	48	44	41	39	33	25	33	52	49	43	41	36	32	30
	350	6	54	47	44	37	27	24	24	56	51	46	41	32	27	39	55	53	47	43	37	28	45	59	53	54	46	39	35	39
	400	8	57	53	48	41	31	27	30	61	58	52	44	36	30	46	62	56	52	46	39	31	58	64	61	57	51	43	36	46
	550	10	62	58	51	42	33	28	36	65	61	54	45	38	32	57	68	63	57	49	41	36	64	71	67	61	54	45	39	57
D	350	2	38	36	32	27	22	19	<20	40	38	35	30	27	23	21	43	42	37	34	28	24	<20	44	43	41	34	32	26	21
	400	4	42	38	36	28	23	20	25	46	42	37	32	27	25	26	46	46	41	36	29	28	25	47	46	44	37	33	29	26
	500	6	47	43	39	30	25	22	35	49	47	42	35	29	28	33	52	49	45	37	30	29	35	53	51	47	39	35	33	33
	600	8	51	45	42	33	28	23	40	55	49	46	37	31	30	40	57	51	48	40	33	32	40	58	55	51	41	36	37	40
	700	10	56	49	43	36	29	24	46	58	51	48	39	32	31	49	60	55	52	41	34	35	46	64	59	54	46	38	39	49
E	500	2	44	41	35	33	28	19	<20	46	43	41	31	29	23	<20	47	44	43	40	32	29	<20	48	47	44	42	36	30	<20
	600	4	47	43	38	34	30	21	<20	51	48	44	35	33	27	28	53	49	48	42	36	31	<20	54	52	49	46	39	34	28
	700	6	51	47	43	37	32	25	30	56	52	47	37	36	28	34	57	52	51	45	39	34	30	59	56	51	49	42	36	34
	800	8	57	50	45	39	35	27	35	61	53	49	43	39	31	43	63	57	53	48	41	36	35	66	59	54	51	46	39	43
	900	10	62	51	47	41	39	28	43	65	56	51	47	42	33	58	69	60	56	51	45	40	43	72	65	59	54	48	43	58
F	700	2	42	43	40	35	32	20	25	44	42	41	39	32	26	30	46	44	43	40	38	28	25	47	45	43	42	36	30	30
	800	4	46	46	43	38	34	24	35	49	45	45	42	35	27	35	50	49	46	45	43	34	35	55	49	48	46	41	37	35
	900	6	51	50	47	41	37	29	40	54	51	49	46	39	31	45	56	53	52	51	47	39	40	61	54	51	49	46	43	45
	1000	8	56	54	51	46	41	35	50	60	57	52	49	43	38	50	65	57	56	56	51	44	50	68	61	57	55	52	49	50
	1100	10	62	57	53	51	43	38	60	65	61	58	54	49	45	57	71	66	62	60	54	52	60	75	69	64	61	57	54	57
G	1000	2	44	42	38	31	24	20	21	47	43	41	35	24	23	24	44	43	38	36	26	24	21	47	44	43	36	29	24	21
	1100	4	49	47	39	33	24	22	26	52	48	45	36	24	23	30	49	47	41	38	29	26	26	52	49	46	39	31	27	26
	1200	6	51	49	41	34	25	23	33	55	52	48	38	26	25	34	54	51	45	39	30	27	33	60	54	50	42	34	29	33
	1300	8	57	52	45	37	26	24	40	61	57	49	40	28	26	40	61	56	51	41	33	27	40	67	61	55	45	37	30	40
	1400	10	63	56	48	39	27	26	49	65	59	51	41	29	27	46	69	62	56	43	35	29	49	72	65	59	47	38	33	49
H	1000	2	38	36	34	28	26	20	24	40	36	35	32	27	21	21	41	39	36	33	29	22	24	43	41	39	35	32	22	<20
	1150	4	43	41	36	28	26	20	30	45	44	40	33	29	23	26	46	45	43	37	32	26	30	48	46	45	38	34	25	21
	1300	6	47	46	39	29	27	21	34	51	47	43	35	30	23	33	51	51	45	40	33	28	34	55	51	51	41	37	28	25
	1450	8	52	49	43	31	27	23	40	56	53	46	37	31	24	40	57	54	48	43	36	29	40	62	57	54	44	40	32	30
	1600	10	58	51	44	33	29	23	46	61	54	49	38	33	25	49	64	58	52	44	38	32	46	69	62	56	49	42	36	41
I	1500	2	45	43	32	32	24	21	27	47	44	38	34	27	22	<20	44	41	38	34	29	23	27	45	43	38	35	30	23	<20
	1700	4	49	46	35	33	26	23	35	51	49	41	36	29	23	29	51	43	41	36	33	24	35	52	50	41	37	33	26	<20
	1850	6	53	49	37	35	27	24	40	55	52	45	39	32	25	34	58	47	45	39	34	27	40	59	57	47	41	36	28	24
	2000	8	59	53	41	36	30	24	48	61	55	46	40	34	26	48	64	55	48	41	37	28	48	66	62	51	45	39	31	30
	2100	10	64	55	43	38	31	26	55	67	59	49	41	35	28	60	71	63	53	45	39	30	55	73	67	58	48	41	33	36
J	1800	2	46	44	41	35	27	22	30	48	45	44	36	29	23	<20	49	48	45	38	36	28	30	50	49	47	41	35	29	<20
	2000	4	49	47	43	36	29	23	35	53	50	48	38	31	25	25	54	53	50	40	38	31	35	56	54	52	44	38	32	25
	2300	6	53	52	45	38	31	25	45	56	54	51	41	34	28	35	59	58	53	44	39	34	45	62	59	57	49	41	35	35
	2550	8	59	57	49	40	32	28	50	62	58	54	45	26	30	40	65	62	56	48	42	36	50	68	65	63	52	44	36	40
	2800	10	65	61	53	41	33	29	57	69	65	56	47	38	32	46	72	68	60	51	43	37	57	75	71	65	54	48	39	46

Notes:

1. All data are measured in accordance with Industry Standard AHRI 880-2011.
2. All sound power levels, dB re: 10"12 Watts.
3. Data in this column constitute AHRI 880-2011 Standard Rating Conditions
4. Where APs is the inlet static pressure minus discharge static.
5. Application ratings are outside the scope of the certification program.

Pressure Independent Type - AHRI Certified VAV

B-30 Series

Engineering and Performance Data

Discharge Sound power Levels

Unit Size	CFM	M/S	Static Pressure @ 125 Pa							Static Pressure @ 250 Pa							Static Pressure @ 375 Pa							Static Pressure @ 500 Pa						
			125	250	500	1k	2k	4k	NC	125	250	500	1k	2k	4k	NC	125	250	500	1k	2k	4k	NC	125	250	500	1k	2k	4k	NC
A	100	2	44	42	38	37	32	26	<20	45	43	40	38	36	29	<20	48	46	43	39	38	31	<20	51	48	46	42	35	32	<20
	125	4	51	50	46	42	34	30	<20	52	50	46	44	39	33	25	54	51	47	44	41	35	<20	55	52	51	46	39	37	23
	150	6	59	57	51	46	37	33	26	60	58	52	48	41	36	33	63	60	56	50	43	40	28	64	61	60	54	43	43	34
	200	8	66	65	57	49	39	37	31	67	66	59	52	44	39	46	71	69	62	55	46	44	34	71	68	68	58	48	47	46
	250	10	71	70	62	51	42	39	40	75	74	66	55	46	44	57	79	77	70	58	50	48	49	82	79	74	62	54	51	59
B	200	2	45	43	39	38	33	27	<20	46	45	43	40	38	31	<20	49	47	45	43	39	32	<20	52	49	46	44	36	33	<20
	250	4	53	51	43	43	35	33	21	53	54	52	44	40	34	30	56	54	52	49	42	36	23	56	57	53	49	41	35	30
	300	6	61	58	48	47	39	36	25	60	62	57	47	43	38	40	64	63	59	52	46	39	34	66	63	59	55	46	38	40
	350	8	68	66	54	50	41	39	30	68	68	61	52	46	41	49	72	70	63	56	48	44	46	70	70	66	59	49	40	49
	400	10	72	69	61	54	43	41	41	75	73	65	57	48	45	58	80	78	68	59	51	49	59	82	79	72	64	56	43	58
C	250	2	41	42	38	36	32	28	<20	44	42	39	37	35	33	25	46	43	38	37	35	30	21	47	45	42	40	37	34	25
	300	4	48	46	41	38	35	31	<20	47	44	43	40	37	35	30	53	47	42	44	38	35	33	54	50	49	44	43	38	30
	350	6	52	51	45	41	37	34	24	54	52	48	43	40	36	39	59	55	49	47	41	39	45	61	56	55	49	45	41	39
	400	8	58	57	48	45	40	37	30	60	59	54	47	42	38	46	65	61	56	53	46	43	58	68	63	61	54	49	45	46
	550	10	65	61	53	49	41	39	36	68	65	58	51	45	42	57	71	68	63	55	49	46	64	74	71	67	59	53	49	57
D	350	2	46	43	41	37	34	29	<20	47	45	43	40	38	34	21	49	46	42	41	39	32	<20	50	48	46	42	40	35	21
	400	4	54	52	44	41	37	32	25	55	49	48	43	40	37	26	57	54	47	46	42	36	25	59	56	54	46	44	39	26
	500	6	63	58	49	47	41	35	35	64	57	55	48	46	38	33	68	62	55	53	46	41	35	67	64	63	55	52	41	33
	600	8	69	64	55	53	45	37	40	71	66	59	54	49	42	40	74	68	61	58	51	46	40	76	71	67	59	55	48	40
	700	10	75	70	61	57	46	40	46	79	71	64	59	51	46	49	82	75	69	62	55	50	46	84	79	73	66	58	52	49
E	500	2	44	42	39	35	33	27	<20	46	43	41	38	35	32	<20	51	46	42	39	35	33	<20	52	50	46	43	38	34	<20
	600	4	51	47	42	38	36	32	<20	53	48	46	42	39	36	28	56	51	47	41	38	37	<20	57	54	52	48	43	37	28
	700	6	58	55	49	43	39	36	30	61	58	53	47	43	39	34	63	57	58	48	45	41	30	65	63	58	55	47	42	34
	800	8	65	59	53	47	43	39	35	67	62	59	51	47	43	43	76	64	63	54	51	48	35	77	74	65	59	56	49	43
	900	10	72	65	59	51	48	43	43	75	69	63	55	52	47	58	82	72	67	60	56	52	43	82	75	70	65	59	53	58
F	700	2	45	44	41	36	34	29	25	47	45	43	40	35	30	30	50	46	44	42	38	35	25	54	48	45	42	39	36	30
	800	4	53	51	46	39	36	30	35	55	52	50	44	38	34	35	56	54	51	45	43	37	35	61	55	53	47	43	42	35
	900	6	59	56	50	43	39	33	40	61	58	54	48	41	37	45	66	59	56	49	46	42	40	69	62	57	51	48	44	45
	1000	8	66	60	55	47	42	37	50	68	65	57	52	45	41	50	73	67	61	54	51	47	50	76	69	63	56	52	49	50
	1100	10	72	65	58	51	45	39	60	75	69	61	54	49	43	57	81	72	66	59	54	51	60	84	74	68	63	57	54	57
G	1000	2	46	45	42	37	35	31	21	47	44	43	41	36	32	24	51	48	46	44	39	35	21	53	49	47	43	39	37	21
	1100	4	51	50	47	40	38	34	26	55	51	49	46	41	36	30	56	53	50	49	43	39	26	61	55	54	51	43	42	26
	1200	6	61	57	51	43	42	38	33	64	58	56	50	46	40	34	66	59	56	53	47	44	33	68	63	60	55	48	48	33
	1300	8	68	62	57	48	45	41	40	72	65	59	54	49	43	40	74	64	63	57	54	49	40	75	70	65	61	56	53	40
	1400	10	75	69	61	52	49	42	49	78	71	65	57	52	48	46	81	74	69	61	58	55	49	83	78	71	66	61	58	49
H	1000	2	44	43	40	38	34	31	24	45	43	42	38	34	30	21	47	44	43	42	38	34	24	50	48	45	41	38	36	<20
	1150	4	47	46	43	41	36	33	30	53	49	45	43	36	34	26	56	51	50	45	41	36	30	57	55	50	46	42	39	21
	1300	6	54	52	48	45	39	36	34	59	55	51	47	40	38	33	61	58	54	48	46	40	34	64	60	57	49	47	45	25
	1450	8	59	58	52	48	41	39	40	64	61	57	51	45	39	40	69	65	59	53	49	46	40	72	68	63	55	52	49	30
	1600	10	69	63	58	53	43	41	46	72	68	64	55	49	45	49	77	71	67	59	55	52	46	80	75	69	63	59	54	41
I	1500	2	46	44	41	38	35	32	27	47	45	43	39	36	32	<20	48	46	44	43	40	35	27	52	50	46	44	41	37	<20
	1700	4	52	47	44	41	37	34	35	54	51	46	42	38	35	29	59	53	50	47	43	38	35	61	56	51	49	42	40	<20
	1850	6	59	55	48	44	39	37	40	61	58	54	47	41	36	34	66	60	57	52	48	42	40	68	62	57	53	47	44	24
	2000	8	67	62	55	48	43	39	48	69	66	59	51	46	48	48	73	58	63	57	52	47	48	74	68	63	58	51	50	30
	2100	10	72	67	61	52	46	42	55	75	71	65	57	51	59	60	80	73	68	61	55	52	55	82	76	71	66	58	54	36
J	1800	2	47	44	43	41	37	33	30	48	47	45	40	37	33	<20	51	49	47	44	39	31	30	53	50	48	45	42	38	<20
	2000	4	53	49	46	44	39	35	35	56	52	49	46	41	37	25	58	55	51	48	43	36	35	59	57	55	50	48	42	25
	2300	6	61	56	54	49	42	39	45	64	60	56	49	46	41	35	67	61	58	54	47	45	45	68	65	64	56	53	47	35
	2550	8	68	61	59	52	45	41	50	73	66	61	54	50	46	40	75	68	65	59	53	51	50	76	72	69	63	58	52	40
	2800	10	75	68	65	58	49	45	57	79	72	69	62	56	51	46	83	76	73	65	60	57	57	84	79	75	69	63	59	46

Notes:

1. All data are measured in accordance with Industry Standard AHRI 880-2011.
2. All sound power levels, dB re: 10"12 Watts.
3. Data in this column constitute AHRI 880-2011 Standard Rating Conditions
4. Where APs is the inlet static pressure minus discharge static.
5. Application ratings are outside the scope of the certification program.

Dual Duct Type - VAV DD

Models B - 20/30 Series

Model: VAVDD-GB- 21x/31x
Rectangular Type
Construction: Galvanized Steel (GI)
Application: Light & Medium Duty

Dual Duct Terminals
Dual duct terminal units are used in a special type of air distribution system where the main system has both warm air and cold air separatly ducted to each termial unit. the flow of both warm air and cool air is modulated, delivering air to the VAV zone at variable air volumes as well as variable temperatures.
A dual duct with integral mixing is similar to the non-mixing type, but has an integral mixing section between the two supply valves and the discharge duct connection. The standard mixing dual duct should provide, at a down-stream distance of three equivalent diameters from the dual duct, a uniform discharge air temperature profile (±1 °F).

Standard construction

Casing
0.9 mm thick galvanized sheet steel.
Insulation
13 mm thick 32 kg/m^3 density Acoustic liner.
Blade
0.9 mm thick galvanized sheet steel.
Flow grid
Flow grid multi point with 12 inlet holes in four concentric circles.
Axle Shaft
12 mm diameter axle shaft made of galvanized steel.
Bearings :
12 mm diameter Brass bearings.
Gasket
Neoprene Gasket.
Controls :
Modulating / On-Off.

Optional Construction

Controls
Backnet DDC with suitable thermostat.
Sound Attenuator
VAV with additional length insulated casing for sound attenuation.
Insulation
25 mm thick 32 kg/m^3 density Acoustic liner.
Blade
0.9 mm thick aluminium extruded aerofoil multiple blades.
Duct Heater
Slip-in type electric duct heater (230V AC 1 Phase or 400V AC 3 Phase)
Double skin
Insulated internal walls surface with Galvanized perforated sheet used for low noise applications to minimise breakout noise.
Neck connections
Round inlet with round outlet and square inlet with square outlet.

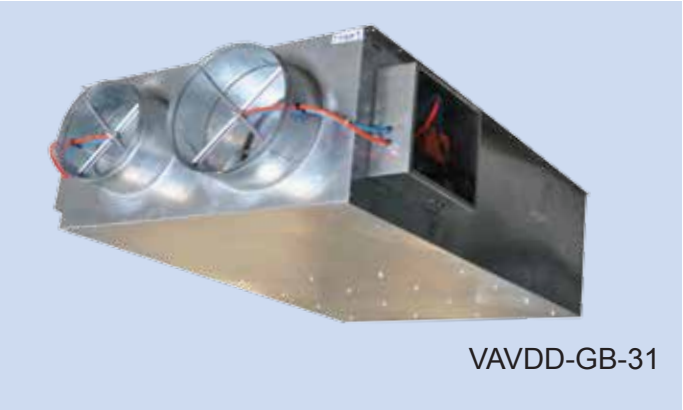
VAVDD-GB-31

Technical Features:

- Volume control range from 100 to 10% is possible to the conditioned zone.
- Accurate airflow sensing with 2 X 12 points averaging.
- Low Leakage i.e. less than 2% of V nominal at 750 Pa.
- Designed to produce low NC levels with minimal pressure drop to the system.
- Suitable for use as constant volume application,it can maintain a set flow requirement, compensating for fluctuations in system pressure.
- Suitable for single duct variable volume control
- Air volume capacity upto 2800 CFM
- Electronics control factory supply & mounted.
- Variety of control options available, based on applications.
- Electronic thermostat & actuator provide accurate mounting control.
- Metal encapsulated edges limit fiberglass insulation erosion into the airstream.
- Single-point power connection reduces installed cost. Maintenance free.
- Mixing dual ducts are used in both interior and exterior zones in buildings such as hospitals, or buildings where the use of auxiliary reheat such as hot water or electric reheat is not desirable.

Dual Duct Type - VAV DD

Models B - 20/30 Series

Models: VAVDD-GB-31 Construction Details and Dimensions

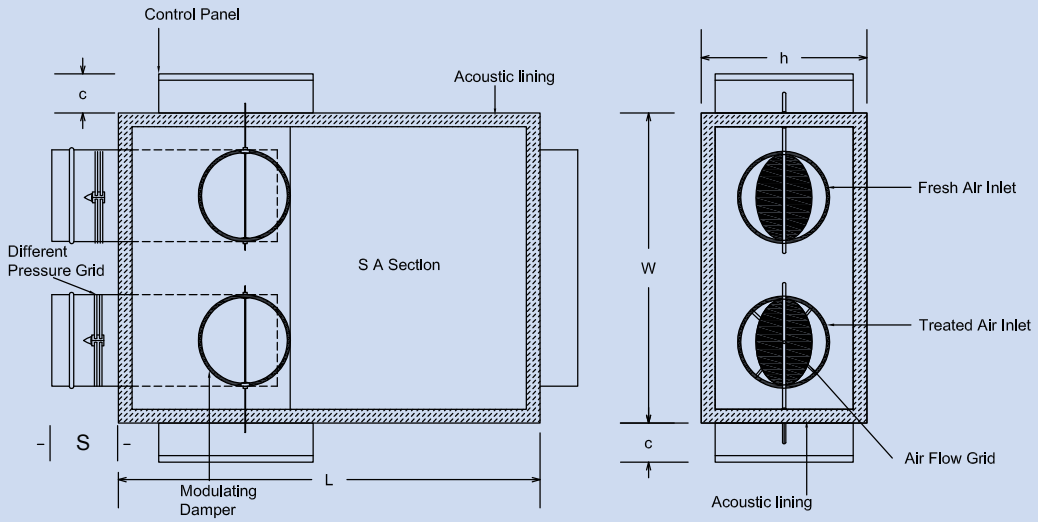

VAV - B30 L + SA

Dimensional data for VAV DD B 20/30 Series									
Model (X)	Air Flow Range (cfm)	d-Inlet (mm)	L (mm)	w (mm)	h (mm)	L+SA (mm)	s (mm)	c (mm)	Thickness of Sheet (Gauge)
A	250	150 ø	400	410	200	1000	125	80	20g
B	400	150 ø	400	450	200	1000	125	80	20g
C	550	200 ø	400	490	250	1000	125	80	20g
D	700	200 ø	400	525	250	1000	125	80	20g
E	900	250 ø	500	575	300	1100	125	80	20g
F	1100	250 ø	500	600	300	1100	125	80	20g
G	1400	300 ø	500	650	350	1100	125	80	20g
H	1600	300 ø	500	700	350	1100	125	80	20g
I	2100	350 ø	600	800	400	1200	125	80	20g
J	2800	350 ø	600	900	400	1200	125	80	20g

Dual Duct Type - VAV DD

Models B - 20/30 Series

Engineering and Performance Data

PI VAV Radiated sound power levels

Unit Model	CFM	M/S	Static Pressure @ 125 Pa							Static Pressure @ 250 Pa							Static Pressure @ 375 Pa							Static Pressure @ 500 Pa						
			125	250	500	1k	2k	4k	NC	125	250	500	1k	2k	4k	NC	125	250	500	1k	2k	4k	NC	125	250	500	1k	2k	4k	NC
A	100	2	35	34	31	27	23	17	<20	38	36	35	33	26	18	<20	40	38	35	34	28	19	<20	43	41	40	36	34	17	<20
	125	4	43	41	37	33	25	19	<20	43	42	39	36	28	22	25	46	42	36	38	29	23	<20	52	44	43	38	36	22	23
	150	6	47	43	41	35	26	21	26	49	47	43	39	29	23	33	52	46	42	40	32	27	28	56	51	47	41	37	26	34
	200	8	51	47	43	37	28	22	31	56	53	45	40	31	25	46	59	55	48	43	33	30	34	62	57	52	44	39	31	46
	250	10	57	54	44	38	29	24	40	61	57	48	41	32	26	57	65	60	52	44	36	32	49	69	63	56	47	40	36	59
B	200	2	42	36	35	28	22	16	<20	44	37	36	34	20	17	<20	45	43	37	35	22	18	<20	47	44	42	35	24	16	<20
	250	4	48	41	38	29	22	16	21	50	42	40	35	21	17	30	49	47	41	36	24	19	23	53	49	46	37	27	19	30
	300	6	53	44	43	31	23	17	25	54	46	43	35	23	18	40	57	55	46	38	25	19	34	59	54	48	41	28	21	40
	350	8	58	47	44	33	24	19	30	61	51	46	37	23	19	49	63	57	49	40	27	21	46	67	58	52	43	30	24	49
	400	10	62	52	47	35	25	20	41	66	56	49	38	25	20	58	70	61	53	41	28	22	59	73	64	57	44	31	25	58
C	250	2	43	38	36	32	24	18	<20	42	41	39	36	26	22	25	44	42	38	36	31	21	21	46	43	37	35	34	29	25
	300	4	47	42	39	34	28	22	<20	48	44	43	37	29	24	30	48	44	41	39	33	25	33	52	49	43	41	36	32	30
	350	6	54	47	44	37	27	24	24	56	51	46	41	32	27	39	55	53	47	43	37	28	45	59	53	54	46	39	35	39
	400	8	57	53	48	41	31	27	30	61	58	52	44	36	30	46	62	56	52	46	39	31	58	64	61	57	51	43	36	46
	550	10	62	58	51	42	33	28	36	65	61	54	45	38	32	57	68	63	57	49	41	36	64	71	67	61	54	45	39	57
D	350	2	38	36	32	27	22	19	<20	40	38	35	30	27	23	21	43	42	37	34	28	24	<20	44	43	41	34	32	26	21
	400	4	42	38	36	28	23	20	25	46	42	37	32	27	25	26	46	46	41	36	29	28	25	47	46	44	37	33	29	26
	500	6	47	43	39	30	25	22	35	49	47	42	35	29	28	33	52	49	45	37	30	29	35	53	51	47	39	35	33	33
	600	8	51	45	42	33	28	23	40	55	49	46	37	31	30	40	57	51	48	40	33	32	40	58	55	51	41	36	37	40
	700	10	56	49	43	36	29	24	46	58	51	48	39	32	31	49	60	55	52	41	34	35	46	64	59	54	46	38	39	49
E	500	2	44	41	35	33	28	19	<20	46	43	41	31	29	23	<20	47	44	43	40	32	29	<20	48	47	44	42	36	30	<20
	600	4	47	43	38	34	30	21	<20	51	48	44	35	33	27	28	53	49	48	42	36	31	<20	54	52	49	46	39	34	28
	700	6	51	47	43	37	32	25	30	56	52	47	37	36	28	34	57	52	51	45	39	34	30	59	56	51	49	42	36	34
	800	8	57	50	45	39	35	27	35	61	53	49	43	39	31	43	63	57	53	48	41	36	35	66	59	54	51	46	39	43
	900	10	62	51	47	41	39	28	43	65	56	51	47	42	33	58	69	60	56	51	45	40	43	72	65	59	54	48	43	58
F	700	2	42	43	40	35	32	20	25	44	42	41	39	32	26	30	46	44	43	40	38	28	25	47	45	43	42	36	30	30
	800	4	46	46	43	38	34	24	35	49	45	45	42	35	27	35	50	49	46	45	43	34	35	55	49	48	46	41	37	35
	900	6	51	50	47	41	37	29	40	54	51	49	46	39	31	45	56	53	52	51	47	39	40	61	54	51	49	46	43	45
	1000	8	56	54	51	46	41	35	50	60	57	52	49	43	38	50	65	57	56	56	51	44	50	68	61	57	55	52	49	50
	1100	10	62	57	53	51	43	38	60	65	61	58	54	49	45	57	71	66	62	60	54	52	60	75	69	64	61	57	54	57
G	1000	2	44	42	38	31	24	20	21	47	43	41	35	24	23	24	44	43	38	36	26	24	21	47	44	43	36	29	24	21
	1100	4	49	47	39	33	24	22	26	52	48	45	36	24	23	30	49	47	41	38	29	26	26	52	49	46	39	31	27	26
	1200	6	51	49	41	34	25	23	33	55	52	48	38	26	25	34	54	51	45	39	30	27	33	60	54	50	42	34	29	33
	1300	8	57	52	45	37	26	24	40	61	57	49	40	28	26	40	61	56	51	41	33	27	40	67	61	55	45	37	30	40
	1400	10	63	56	48	39	27	26	49	65	59	51	41	29	27	46	69	62	56	43	35	29	49	72	65	59	47	38	33	49
H	1000	2	38	36	34	28	26	20	24	40	36	35	32	27	21	21	41	39	36	33	29	22	24	43	41	39	35	32	22	<20
	1150	4	43	41	36	28	26	20	30	45	44	40	33	29	23	26	46	45	43	37	32	26	30	48	46	45	38	34	25	21
	1300	6	47	46	39	29	27	21	34	51	47	43	35	30	23	33	51	51	45	40	33	28	34	55	51	51	41	37	28	25
	1450	8	52	49	43	31	27	23	40	56	53	46	37	31	24	40	57	54	48	43	36	29	40	62	57	54	44	40	32	30
	1600	10	58	51	44	33	29	23	46	61	54	49	38	33	25	49	64	58	52	44	38	32	46	69	62	56	49	42	36	41
I	1500	2	45	43	32	32	24	21	27	47	44	38	34	27	22	<20	44	41	38	34	29	23	27	45	43	38	35	30	23	<20
	1700	4	49	46	35	33	26	23	35	51	49	41	36	29	23	29	51	43	41	36	33	24	35	52	50	41	37	33	26	<20
	1850	6	53	49	37	35	27	24	40	55	52	45	39	32	25	34	58	47	45	39	34	27	40	59	57	47	41	36	28	24
	2000	8	59	53	41	36	30	24	48	61	55	46	40	34	26	48	64	55	48	41	37	28	48	66	62	51	45	39	31	30
	2100	10	64	55	43	38	31	26	55	67	59	49	41	35	28	60	71	63	53	45	39	30	55	73	67	58	48	41	33	36
J	1800	2	46	44	41	35	27	22	30	48	45	44	36	29	23	<20	49	48	45	38	36	28	30	50	49	47	41	35	29	<20
	2000	4	49	47	43	36	29	23	35	53	50	48	38	31	25	25	54	53	50	40	38	31	35	56	54	52	44	38	32	25
	2300	6	53	52	45	38	31	25	45	56	54	51	41	34	28	35	59	58	53	44	39	34	45	62	59	57	49	41	35	35
	2550	8	59	57	49	40	32	28	50	62	58	54	45	26	30	40	65	62	56	48	42	36	50	68	65	63	52	44	36	40
	2800	10	65	61	53	41	33	29	57	69	65	56	47	38	32	46	72	68	60	51	43	37	57	75	71	65	54	48	39	46

Notes:

1. All data are measured in accordance with Industry Standard AHRI 880-2011.
2. All sound power levels, dB re: 10"12 Watts.
3. Data in this column constitute AHRI 880-2011 Standard Rating Conditions
4. Where APs is the inlet static pressure minus discharge static.
5. Application ratings are outside the scope of the certification program.

Dual Duct Type - VAV DD

Models B - 20/30 Series

Engineering and Performance Data

PI VAV Discharge Sound power Levels

Unit Size	CFM	M/S	Static Pressure @ 125 Pa							Static Pressure @ 250 Pa							Static Pressure @ 375 Pa							Static Pressure @ 500 Pa						
			125	250	500	1k	2k	4k	NC	125	250	500	1k	2k	4k	NC	125	250	500	1k	2k	4k	NC	125	250	500	1k	2k	4k	NC
A	100	2	44	42	38	37	32	26	<20	45	43	40	38	36	29	<20	48	46	43	39	38	31	<20	51	48	46	42	35	32	<20
	125	4	51	50	46	42	34	30	<20	52	50	46	44	39	33	25	54	51	47	44	41	35	<20	55	52	51	46	39	37	23
	150	6	59	57	51	46	37	33	26	60	58	52	48	41	36	33	63	60	56	50	43	40	28	64	61	60	54	43	43	34
	200	8	66	65	57	49	39	37	31	67	66	59	52	44	39	46	71	69	62	55	46	44	34	71	68	68	58	48	47	46
	250	10	71	70	62	51	42	39	40	75	74	66	55	46	44	57	79	77	70	58	50	48	49	82	79	74	62	54	51	59
B	200	2	45	43	39	38	33	27	<20	46	45	43	40	38	31	<20	49	47	45	43	39	32	<20	52	49	46	44	36	33	<20
	250	4	53	51	43	43	35	33	21	53	54	52	44	40	34	30	56	54	52	49	42	36	23	56	57	53	49	41	35	30
	300	6	61	58	48	47	39	36	25	60	62	57	47	43	38	40	64	63	59	52	46	39	34	66	63	59	55	46	38	40
	350	8	68	66	54	50	41	39	30	68	68	61	52	46	41	49	72	70	63	56	48	44	46	70	70	66	59	49	40	49
	400	10	72	69	61	54	43	41	41	75	73	65	57	48	45	58	80	78	68	59	51	49	59	82	79	72	64	56	43	58
C	250	2	41	42	38	36	32	28	<20	44	42	39	37	35	33	25	46	43	38	37	35	30	21	47	45	42	40	37	34	25
	300	4	48	46	41	38	35	31	<20	47	44	43	40	37	35	30	53	47	42	44	38	35	33	54	50	49	44	43	38	30
	350	6	52	51	45	41	37	34	24	54	52	48	43	40	36	39	59	55	49	47	41	39	45	61	56	55	49	45	41	39
	400	8	58	57	48	45	40	37	30	60	59	54	47	42	38	46	65	61	56	53	46	43	58	68	63	61	54	49	45	46
	550	10	65	61	53	49	41	39	36	68	65	58	51	45	42	57	71	68	63	55	49	46	64	74	71	67	59	53	49	57
D	350	2	46	43	41	37	34	29	<20	47	45	43	40	38	34	21	49	46	42	41	39	32	<20	50	48	46	42	40	35	21
	400	4	54	52	44	41	37	32	25	55	49	48	43	40	37	26	57	54	47	46	42	36	25	59	56	54	46	44	39	26
	500	6	63	58	49	47	41	35	35	64	57	55	48	46	38	33	68	62	55	53	46	41	35	67	64	63	55	52	41	33
	600	8	69	64	55	53	45	37	40	71	66	59	54	49	42	40	74	68	61	58	51	46	40	76	71	67	59	55	48	40
	700	10	75	70	61	57	46	40	46	79	71	64	59	51	46	49	82	75	69	62	55	50	46	84	79	73	66	58	52	49
E	500	2	44	42	39	35	33	27	<20	46	43	41	38	35	32	<20	51	46	42	39	35	33	<20	52	50	46	43	38	34	<20
	600	4	51	47	42	38	36	32	<20	53	48	46	42	39	36	28	56	51	47	41	38	37	<20	57	54	52	48	43	37	28
	700	6	58	55	49	43	39	36	30	61	58	53	47	43	39	34	63	57	58	48	45	41	30	65	63	58	55	47	42	34
	800	8	65	59	53	47	43	39	35	67	62	59	51	47	43	43	76	64	63	54	51	48	35	77	74	65	59	56	49	43
	900	10	72	65	59	51	48	43	43	75	69	63	55	52	47	58	82	72	67	60	56	52	43	82	75	70	65	59	53	58
F	700	2	45	44	41	36	34	29	25	47	45	43	40	35	30	30	50	46	44	42	38	35	25	54	48	45	42	39	36	30
	800	4	53	51	46	39	36	30	35	55	52	50	44	38	34	35	56	54	51	45	43	37	35	61	55	53	47	43	42	35
	900	6	59	56	50	43	39	33	40	61	58	54	48	41	37	45	66	59	56	49	46	42	40	69	62	57	51	48	44	45
	1000	8	66	60	55	47	42	37	50	68	65	57	52	45	41	50	73	67	61	54	51	47	50	76	69	63	56	52	49	50
	1100	10	72	65	58	51	45	39	60	75	69	61	54	49	43	57	81	72	66	59	54	51	60	84	74	68	63	57	54	57
G	1000	2	46	45	42	37	35	31	21	47	44	43	41	36	32	24	51	48	46	44	39	35	21	53	49	47	43	39	37	21
	1100	4	51	50	47	40	38	34	26	55	51	49	46	41	36	30	56	53	50	49	43	39	26	61	55	54	51	43	42	26
	1200	6	61	57	51	43	42	38	33	64	58	56	50	46	40	34	66	59	56	53	47	44	33	68	63	60	55	48	48	33
	1300	8	68	62	57	48	45	41	40	72	65	59	54	49	43	40	74	64	63	57	54	49	40	75	70	65	61	56	53	40
	1400	10	75	69	61	52	49	42	49	78	71	65	57	52	48	46	81	74	69	61	58	55	49	83	78	71	66	61	58	49
H	1000	2	44	43	40	38	34	31	24	45	43	42	38	34	30	21	47	44	43	42	38	34	24	50	48	45	41	38	36	<20
	1150	4	47	46	43	41	36	33	30	53	49	45	43	36	34	26	56	51	50	45	41	36	30	57	55	50	46	42	39	21
	1300	6	54	52	48	45	39	36	34	59	55	51	47	40	38	33	61	58	54	48	46	40	34	64	60	57	49	47	45	25
	1450	8	59	58	52	48	41	39	40	64	61	57	51	45	39	40	69	65	59	53	49	46	40	72	68	63	55	52	49	30
	1600	10	69	63	58	53	43	41	46	72	68	64	55	49	45	49	77	71	67	59	55	52	46	80	75	69	63	59	54	41
I	1500	2	46	44	41	38	35	32	27	47	45	43	39	36	32	<20	48	46	44	43	40	35	27	52	50	46	44	41	37	<20
	1700	4	52	47	44	41	37	34	35	54	51	46	42	38	35	29	59	53	50	47	43	38	35	61	56	51	49	42	40	<20
	1850	6	59	55	48	44	39	37	40	61	58	54	47	41	36	34	66	60	57	52	48	42	40	68	62	57	53	47	44	24
	2000	8	67	62	55	48	43	39	48	69	66	59	51	46	48	48	73	58	63	57	52	47	48	74	68	63	58	51	50	30
	2100	10	72	67	61	52	46	42	55	75	71	65	57	51	59	60	80	73	68	61	55	52	55	82	76	71	66	58	54	36
J	1800	2	47	44	43	41	37	33	30	48	47	45	40	37	33	<20	51	49	47	44	39	31	30	53	50	48	45	42	38	<20
	2000	4	53	49	46	44	39	35	35	56	52	49	46	41	37	25	58	55	51	48	43	36	35	59	57	55	50	48	42	25
	2300	6	61	56	54	49	42	39	45	64	60	56	49	46	41	35	67	61	58	54	47	45	45	68	65	64	56	53	47	35
	2550	8	68	61	59	52	45	41	50	73	66	61	54	50	46	40	75	68	65	59	53	51	50	76	72	69	63	58	52	40
	2800	10	75	68	65	58	49	45	57	79	72	69	62	56	51	46	83	76	73	65	60	57	57	84	79	75	69	63	59	46

Notes:

1. All data are measured in accordance with Industry Standard AHRI 880-2011.
2. All sound power levels, dB re: 10"12 Watts.
3. Data in this column constitute AHRI 880-2011 Standard Rating Conditions
4. Where APs is the inlet static pressure minus discharge static.
5. Application ratings are outside the scope of the certification program.

Selected Products of the company have been Classified / Listed / Tested by various international testing authorities.

Globally Recognized. Industry Respected.

Heavy Duty Type - VAVH / VAVHDS
Models B - 10/20/30

Heavy Duty Models VAVH B - 10/20/30 For High Pressure Applications

Heavy duty type Bypass , Pressure Independant and Pressure Dependant VAVs' are manufactured for high pressure applications.

Standard construction

Casing
1.2 mm thick galvanized sheet steel.
Insulation
25 mm thick 32 kg/m^3 density Acoustic liner.
Blade
0.9 mm thick aluminium extruded aerofoil multiple blades.
Flow grid
Flow grid multi point with 12 inlet holes in four concentric circles.
Axle Shaft
12 mm diameter axle shaft made of galvanized steel.
Bearings :
12 mm diameter Brass bearings.
Neoprene Gasket.
Controls :
Modulating / On-Off.

Optional Construction

Controls
Backnet DDC with suitable thermostat.
Sound Attenuator
VAV with additional length insulated casing for sound attenuation.
Duct Heater
Slip-in type electric duct heater (230V AC 1 Phase or 400V AC 3 Phase)
Double skin
Insulated internal walls surface with Galvanized perforated sheet used for low noise applications to minimise breakout noise.
Neck connections
Round inlet with round outlet and square inlet with square outlet.

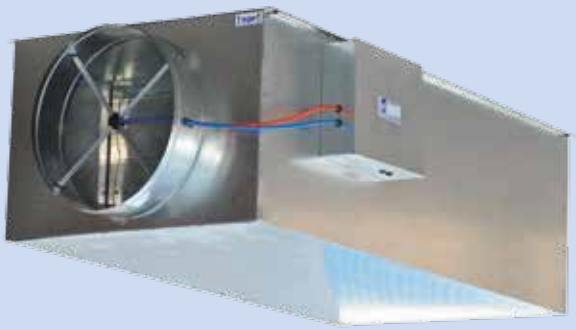

VAVH-GB-31

Technical Features:

- Volume control range from 100 to 10% is possible to the conditioned zone.
- Accurate airflow sensing with 2 X 12 points averaging.
- Low Leakage i.e. less than 2% of V nominal at 750 Pa.
- Designed to produce low NC levels with minimal pressure drop to the system.
- Suitable for use as constant volume application,it can maintain a set flow requirement, compensating for fluctuations in system pressure.
- Suitable for single duct variable volume control
- Air volume capacity upto 2800 CFM
- Electronics control factory supply & mounted.
- Variety of control options available, based on applications.
- Electronic thermostat & actuator provide accurate mounting control.
- Metal encapsulated edges limit fiberglass insulation erosion into the airstream.
- Single-point power connection reduces installed cost. Maintenance free.
- AHRI Certified

Heavy Duty Type - VAVH / VAVHDS

B-10/20/30 Series

Model : VAVH / DS B 10/20/30 - Construction Details And Dimensions

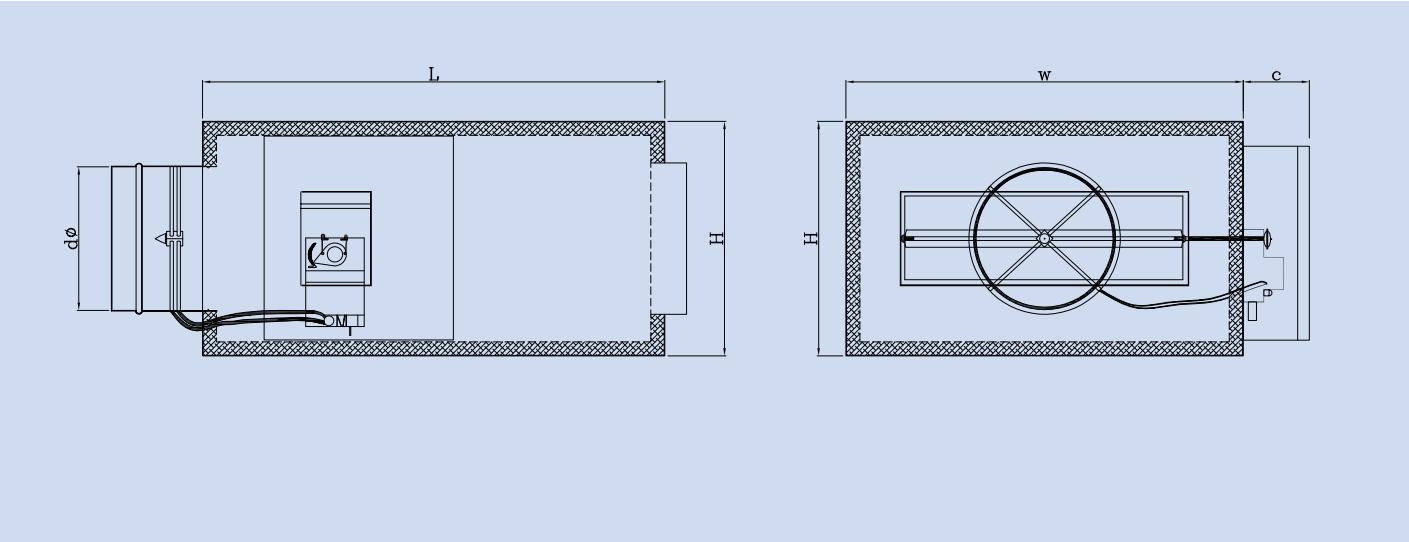

Dimensional data for VAV H B 10/20/30									
Model (X)	Air Flow Range (cfm)	d-Inlet (mm)	L (mm)	L+SA (mm)	w (mm)	h (mm)	s (mm)	c (mm)	Casing (Gauge)
K	3500	450 ø	1000	1600	900	550	125	80	18g
L	4400	500 ø	1000	1600	900	600	125	80	18g
M	5300	550 ø	1000	1600	900	650	125	80	18g
N	6300	600 ø	1000	1600	900	700	125	80	18g

Selected Products of the company have been Classified / Listed / Tested by various international testing authorities.
Globally Recognized. Industry Respected.

Induction Type - VAV

B-40 Series

Model: VAV-GB- 41x
Construction: Galvanized Steel (GI)
Application: Light & Medium Duty

Induction VAV Model GB-41 is pressure-independent VAV where air volume control terminals are designed particularly for systems with high variations in heat load. The terminals induce room air and mix it with conditioned primary air, maintaining a nearly constant air volume to the room thus providing sufficient air movement necessary to maintain occupant comfort even in extreme load variations ensuring cold air 'dumping' will not occur and comfort zone will be maintained under extremely low primary air temperatures, without producing excessive differences between the supply and the room air temperature.

VAV-GB-41E

Standard construction

Casing
0.9 /1.2 mm thick galvanized sheet steel.
Insulation
25 mm thick 32 kg/m^3 density Acoustic liner.
Blade
0.9 mm thick galvanized sheet steel.
Flow grid
Flow grid multi point with 12 inlet holes in four concentric circles.
Axle Shaft
12 mm diameter axle shaft made with galvanized steel
Bearings :
12 mm diameter Brass bearings.
Gasket
Neoprene Gasket.
Controls :
Modulating

Optional Construction

Controls
Backnet DDC with suitable thermostat.
Duct Heater
Slip-in type electric duct heater (230V AC 1 Phase or 400V AC 3 Phase)
Double skin
Insulated internal walls surface with Galvanized perforated sheet used for low noise applications to minimise breakout noise.
Neck connections
Round inlet with round outlet and square inlet with square outlet.

Note :
Casing thickness varies with respective models.

Technical Features:

- Volume control range from 100 to 10% is possible to the conditioned zone.
- Accurate airflow sensing with 2 X 12 points averaging.
- Low Leakage i.e. less than 2% of V nominal at 750 Pa.
- Designed to produce low NC levels with minimal pressure drop to the system.
- Suitable for low temperature primary systems.
- Air volume capacity upto 2800 CFM
- Suitable for use as constant volume application
- Electronics control factory supply & mounted.
- Variety of control options available, based on applications.
- Electronic thermostat & actuator provide accurate mounting control.
- Metal encapsulated edges limit fiberglass insulation erosion into the airstream.
- Single-point power connection reduces installed cost. Maintenance free.

Induction Type - VAV

B - 40 Series

Model: VAV-GB-41 - Construction Details And Dimensions

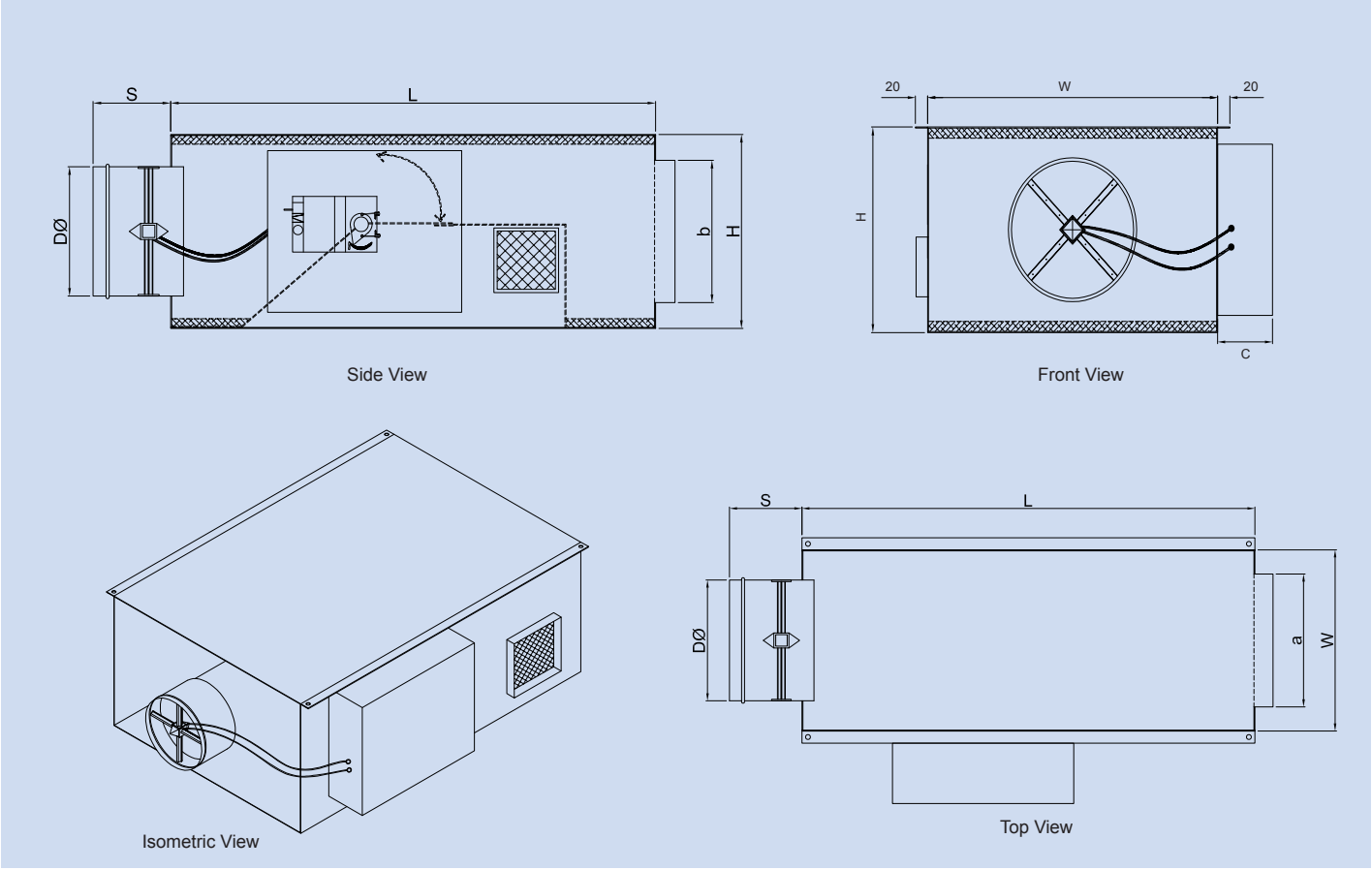

Dimensional data for VAV-GB- 40 - Induction Type										
Model X	Air Flow Range (cfm)	d-Inlet (mm)	L (mm)	w (mm)	h (mm)	Discharge		s (mm)	c (mm)	Casing (Gauge)
						a	b			
A	150	100 ø	1000	350	220	300	150	125	80	20g
B	400	150 ø	1000	400	250	350	180	125	80	20g
C	700	200 ø	1000	500	270	450	200	125	80	20g
D	1100	250 ø	1000	600	300	550	230	125	80	20g
E	1600	300 ø	1500	750	400	700	330	125	80	18g
F	2100	350 ø	1500	800	430	750	360	125	80	18g
G	2800	400 ø	1500	900	460	850	390	125	80	18g

Selected Products of the company have been Classified / Listed / Tested by various international testing authorities.
Globally Recognized. Industry Respected.

Induction Type - VAV

B - 40 Series

Engineering and Performance Data

Radiated sound power levels

Model	CFM	Velocity	Static Pressure @ 125 Pa							Static Pressure @ 250 Pa							Static Pressure @ 375 Pa							Static Pressure @ 500 Pa						
		m/s	125	250	500	1k	2k	4k	NC	125	250	500	1k	2k	4k	NC	125	250	500	1k	2k	4k	NC	125	250	500	1k	2k	4k	NC
A	29	2	30	28	25	24	18	15	<20	32	31	27	26	20	16	<20	39	38	39	32	27	20	<20	41	40	41	34	29	22	<20
	58	4	35	33	27	26	20	18	<20	37	36	29	28	22	19	<20	43	41	40	35	29	23	<20	45	43	42	37	31	25	21
	89	6	41	36	29	30	23	19	<20	43	39	31	31	25	20	<20	49	45	41	39	33	24	21	51	47	43	41	35	26	25
	118	8	45	39	33	35	28	23	<20	47	42	35	36	30	24	<20	52	49	43	41	36	28	25	54	51	45	43	38	30	30
	147	10	47	44	38	38	32	25	<20	49	47	40	39	34	26	22	54	52	44	43	38	30	30	56	54	46	45	40	32	35
B	80	2	38	33	33	29	22	19	<20	40	36	35	30	24	20	<20	40	37	39	33	28	25	25	42	39	41	35	30	27	25
	160	4	44	34	38	33	26	23	<20	46	37	40	34	28	24	<20	44	40	41	37	31	69	27	46	42	43	39	33	71	27
	240	6	45	37	41	36	29	26	<20	47	40	43	37	31	27	<20	46	45	44	41	36	29	29	48	47	46	43	38	31	29
	320	8	48	44	43	40	34	29	<20	50	47	45	41	36	30	21	51	49	47	46	38	35	37	53	51	49	48	40	37	37
	400	10	51	45	45	43	36	31	21	53	48	47	44	38	32	27	56	52	51	48	42	36	39	58	54	53	50	44	38	39
C	149	2	49	37	36	28	24	20	<20	51	40	38	29	26	21	<20	46	47	41	30	33	24	24	48	49	43	32	35	26	29
	280	4	51	40	38	32	26	24	<20	53	43	40	33	28	25	<20	47	51	45	31	37	28	25	49	53	47	33	39	30	30
	429	6	53	44	41	36	31	27	<20	55	47	43	37	33	28	<20	54	59	47	37	40	31	27	56	61	49	39	42	33	32
	569	8	58	48	45	39	35	30	<20	60	51	47	40	37	31	21	59	57	51	43	43	34	30	61	59	53	45	45	36	35
	710	10	59	53	49	44	38	31	21	61	56	51	45	40	32	24	65	60	55	49	44	38	33	67	62	57	51	46	40	37
D	221	2	46	37	37	27	25	24	<20	48	40	39	28	27	25	<20	54	48	41	36	33	19	<20	56	50	43	38	35	21	<20
	439	4	48	41	45	30	30	27	<20	50	44	47	31	32	28	<20	57	51	44	39	35	23	<20	59	53	46	41	37	25	<20
	658	6	55	44	48	35	31	28	<20	57	47	50	36	33	29	<20	61	54	47	43	37	27	<20	63	56	49	45	39	29	<20
	882	8	58	51	51	39	34	32	<20	60	54	53	40	36	33	<20	64	59	52	47	41	33	<20	66	61	54	49	43	35	21
	1105	10	62	55	52	46	40	34	<20	64	58	54	47	42	35	<20	69	61	57	48	43	39	<20	71	63	59	50	45	41	22
E	319	2	50	40	39	34	24	23	<20	52	43	41	35	26	24	<20	55	47	48	35	31	28	24	57	49	50	37	33	30	29
	643	4	54	47	42	36	28	24	<20	56	50	44	37	30	25	<20	59	49	52	37	37	31	25	61	51	54	39	39	33	30
	971	6	58	51	46	40	30	26	<20	60	54	48	41	32	27	<20	63	54	54	43	39	35	27	65	56	56	45	41	37	32
	1290	8	62	54	50	42	38	32	<20	64	57	52	43	40	33	<20	67	59	57	44	43	37	30	69	61	59	46	45	39	35
	1610	10	67	58	55	47	41	38	21	69	61	57	48	43	39	26	70	65	61	49	47	39	33	72	67	63	51	49	41	37
F	421	2	56	47	44	36	28	26	<20	58	50	46	37	30	27	<20	57	51	47	39	31	28	29	59	53	49	41	33	30	29
	839	4	58	51	47	39	30	29	<20	60	54	49	40	32	30	<20	60	55	53	41	32	33	30	62	57	55	43	34	35	30
	1262	6	61	54	50	43	35	32	<20	63	57	52	44	37	33	<20	63	57	58	45	43	37	32	65	59	60	47	45	39	32
	1679	8	63	57	55	46	39	34	<20	65	60	57	47	41	35	24	65	63	60	46	48	40	35	67	65	62	48	50	42	35
	2110	10	66	60	58	49	43	36	23	68	63	60	50	45	37	30	73	68	65	52	50	42	37	75	70	67	54	52	44	37
G	563	2	56	48	44	35	31	23	<20	58	51	46	36	33	24	<20	59	56	48	39	40	33	29	61	58	50	41	42	35	29
	1120	4	58	52	46	38	35	26	<20	60	55	48	39	37	27	<20	60	60	49	43	45	38	30	62	62	51	45	47	40	30
	1685	6	62	54	48	42	38	30	<20	64	57	50	43	40	31	<20	65	64	56	47	47	41	32	67	66	58	49	49	43	32
	2241	8	66	60	52	44	42	34	22	68	63	54	45	44	35	25	69	70	63	50	52	43	35	71	72	65	52	54	45	35
	2815	10	68	62	58	48	44	38	23	70	65	60	49	46	39	30	75	71	68	55	54	47	37	77	73	70	57	56	49	37

Notes:

1. All sound power levels, dB re: 10"12 Watts.
2. Where APs is the inlet static pressure minus discharge static.
3. Application ratings are outside the scope of the certification program.

Induction Type - VAV

B - 40 Series

Engineering and Performance Data

Discharge sound power levels

Model	CFM	Velocity	Static Pressure @ 125 Pa							Static Pressure @ 250 Pa							Static Pressure @ 375 Pa							Static Pressure @ 500 Pa						
		m/s	125	250	500	1k	2k	4k	NC	125	250	500	1k	2k	4k	NC	125	250	500	1k	2k	4k	NC	125	250	500	1k	2k	4k	NC
A	29	2	42	40	38	32	25	17	<20	44	42	40	34	27	19	<20	44	39	31	31	27	21	22	46	41	33	33	29	23	22
	58	4	43	42	40	35	28	21	<20	45	44	42	37	30	23	30	48	41	37	37	30	26	29	50	43	39	39	32	28	29
	89	6	44	44	42	37	33	23	27	46	46	44	39	35	25	31	49	47	41	40	35	30	33	51	49	43	42	37	32	33
	118	8	47	46	43	39	35	26	33	49	48	45	41	37	28	35	53	49	46	41	37	34	29	55	51	48	43	39	36	39
	147	10	49	47	45	41	38	29	39	51	49	47	43	40	31	40	55	52	50	46	44	35	44	57	54	52	48	46	37	44
B	80	2	41	41	40	37	31	24	<20	43	43	42	39	33	26	24	50	51	40	43	38	29	27	52	53	42	45	40	31	27
	160	4	44	46	44	41	35	27	<20	46	48	46	43	37	29	25	55	56	44	46	41	32	29	57	58	46	48	43	34	29
	240	6	49	51	45	43	39	32	29	51	53	47	45	41	34	29	57	59	47	49	46	35	33	59	61	49	51	48	37	33
	320	8	53	55	49	47	42	36	28	55	57	51	49	44	38	34	61	61	54	50	50	40	36	63	63	56	52	52	42	36
	400	10	60	57	55	53	49	34	33	62	59	57	55	51	36	40	64	63	58	54	53	43	39	66	65	60	56	55	45	39
C	149	2	47	39	33	34	25	19	<20	49	41	35	36	27	21	25	56	52	42	40	37	32	29	58	54	44	42	39	34	27
	280	4	53	45	38	37	27	26	<20	55	47	40	39	29	28	26	57	55	46	43	41	36	30	59	57	48	45	43	38	30
	429	6	57	50	43	39	29	28	22	59	52	45	41	31	30	34	60	58	50	49	47	40	37	62	60	52	51	49	42	37
	569	8	61	55	48	45	38	31	29	63	57	50	47	40	33	33	63	61	55	52	50	41	40	65	63	57	54	52	43	40
	710	10	62	59	52	50	45	37	33	64	61	54	52	47	39	37	67	65	58	56	51	43	43	69	67	60	58	53	45	43
D	221	2	47	46	41	31	27	17	26	49	48	43	33	29	19	27	57	50	47	53	37	33	30	59	52	49	55	39	35	30
	439	4	49	51	45	36	29	20	30	51	53	47	38	31	22	30	61	54	50	46	40	36	37	63	56	52	48	42	38	37
	658	6	55	55	49	39	35	26	34	57	57	51	41	37	28	37	68	60	55	51	45	37	40	70	62	57	53	47	39	40
	882	8	61	58	51	45	37	30	36	63	60	53	47	39	32	40	70	63	57	55	47	40	43	72	65	59	57	49	42	43
	1105	10	65	63	55	51	47	38	39	67	65	57	53	49	40	43	71	69	62	58	54	44	45	73	71	64	60	56	46	45
E	319	2	52	47	39	34	31	36	25	54	49	41	36	33	38	27	52	47	46	44	40	33	33	54	49	48	46	42	35	33
	643	4	57	51	44	39	35	38	26	59	53	46	41	37	40	30	61	63	47	47	45	38	35	63	65	49	49	47	40	35
	971	6	59	55	45	43	41	41	31	61	57	47	45	43	43	37	65	65	51	51	46	40	40	67	67	53	53	48	42	40
	1290	8	65	62	51	49	45	44	35	67	64	53	51	47	46	40	70	67	58	56	50	42	44	72	69	60	58	52	44	44
	1610	10	67	65	57	53	48	47	39	69	67	59	55	50	49	43	73	71	62	58	54	44	46	75	73	64	60	56	46	46
F	421	2	55	38	47	37	36	24	22	57	40	49	39	38	26	25	61	57	51	47	43	30	27	63	59	53	49	45	32	27
	839	4	58	44	48	39	38	27	26	60	46	50	41	40	29	26	67	64	55	51	46	31	30	69	66	57	53	48	33	30
	1262	6	61	56	53	44	41	31	31	63	58	55	46	43	33	31	70	70	57	55	50	37	37	72	72	59	57	52	39	37
	1679	8	69	61	55	48	45	35	33	71	63	57	50	47	37	35	73	72	60	58	53	41	40	75	74	62	60	55	43	40
	2110	10	70	68	59	53	49	38	35	72	70	61	55	51	40	39	76	74	65	60	55	46	43	78	76	67	62	57	48	43
G	563	2	56	57	45	35	31	19	26	58	59	47	37	33	21	26	66	61	57	50	37	24	30	68	63	59	52	39	26	30
	1120	4	58	59	48	41	35	23	29	60	61	50	43	37	25	30	67	65	60	54	40	29	39	69	67	62	56	42	31	39
	1685	6	65	65	51	47	39	29	33	67	67	53	49	41	31	33	70	70	64	55	47	33	40	72	72	66	57	49	35	40
	2241	8	69	66	59	52	44	33	35	71	68	61	54	46	35	35	74	73	68	60	50	39	55	76	75	70	62	52	41	45
	2815	10	72	69	62	56	48	39	39	74	71	64	58	50	41	40	77	75	70	64	54	46	60	79	77	72	66	56	48	60

Notes:

1. All sound power levels, dB re: 10"12 Watts.
2. Where APs is the inlet static pressure minus discharge static.
3. Application ratings are outside the scope of the certification program.

Selected Products of the company have been Classified / Listed / Tested by various international testing authorities.

Globally Recognized. Industry Respected.

Constant Air Volume

B-50 Series

Model: CAV-GB-51x
Construction: Galvanized Steel (GI)
Application: Light & Medium Duty

Constant Air Volume (CAV) Model B-51 is used in heating, ventilating, and air-conditioning system. In CAV system, the supply air flow rate is constant, but the supply air temperature is varied to meet the thermal loads of a space.

In CAV application the terminals maintain the required constant airflow independent to inlet statis pressure. CAV systems are often used due to their simplicity, low cost, and reliability in small buildings and residences. CAV systems often have on/off control, rather than supply air temperature modulation, to vary their heating or cooling capacities to serve a single thermal zone.CAV systems are usually used in spaces with large open areas having uniform loads like theaters, auditoriums and exhibition halls.

Standard construction

Casing
0.9 mm thick galvanized sheet steel.
Insulation
13 mm thick 32 kg/m^3 density Acoustic liner.
Blade
0.9 mm thick galvanized sheet steel.
Flow grid
Flow grid multi point with 12 inlet holes in four concentric circles.
Axle Shaft
12 mm diameter axle shaft made with galvanized steel
Bearings
12 mm diameter Brass Bushes.
Gasket
Neoprene Gasket.
Controls
Modulating / On-Off.

Optional Construction

Controls
Backnet DDC with suitable thermostat.
Insulation
25 mm thick 32 kg/m^3 density Acoustic liner.
Blade
0.9 mm thick aluminium extruded aerofoil multiple blades.
Duct Heater
Slip-in type electric duct heater (230V AC 1 Phase or 400V AC 3 Phase)
Double skin
Insulated internal walls surface with Galvanized perforated sheet used for low noise applications to minimise breakout noise.
Neck connections
Round inlet with round outlet and square inlet with square outlet.

CAV-GB-51D

Technical Features:

- Volume control range from 100 to 10% is possible to the conditioned zone.
- CAV with reheat, CAV multizone, and CAV primary-secondary systems can serve multiple zones and larger buildings.
- Accurate airflow sensing with 2 X 12 points averaging.
- Low Leakage i.e. less than 2% of V nominal at 750 Pa.
- Designed to produce low NC levels with minimal pressure drop to the system.
- Suitable for low temperature primary systems.
- Air volume capacity upto 2800 CFM
  Suitable for use as constant volume application
- Electronics control factory supply & mounted.
- Variety of control options available, based on applications.
- Electronic thermostat & actuator provide accurate mounting control.
- Metal encapsulated edges limit fiberglass insulation erosion into the airstream.
- Single-point power connection reduces installed cost. Maintenance free.

Constant Air Volume

B - 50 Series

Model : Models CAV-GB-51 Construction Details and Dimensions

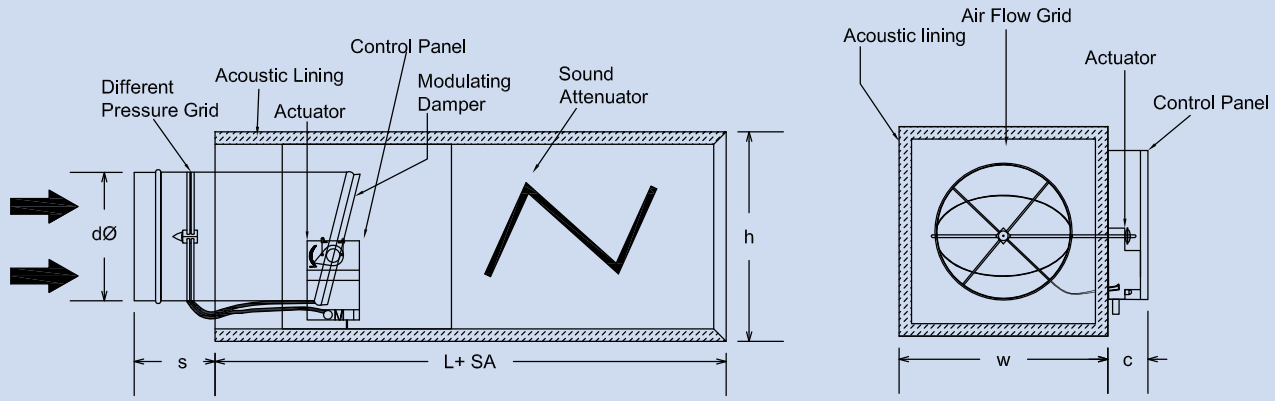

CAV - B51

Dimensional data for CAV-GB-50 Series									
	Air Flow Range (cfm)	d-Inlet (mm)	L (mm)	w (mm)	h (mm)	L+SA (mm)	s (mm)	c (mm)	Casing (Gauge)
A	250	150 ø	600	275	200	1000	100	80	20g
B	400	150 ø	600	300	200	1000	100	80	20g
C	550	200 ø	650	325	250	1050	100	80	20g
D	700	200 ø	650	350	250	1050	125	80	20g
E	900	250 ø	700	375	300	1100	125	80	20g
F	1100	250 ø	700	400	300	1100	125	80	20g
G	1400	300 ø	750	425	350	1150	125	80	20g
H	1600	300 ø	750	450	350	1150	150	80	20g
I	2100	350 ø	800	500	400	1200	150	80	20g
J	2800	350 ø	800	600	400	1200	150	80	20g

Selected Products of the company have been Classified / Listed / Tested by various international testing authorities.
Globally Recognized. Industry Respected.

Constant Air Volume

B - 50 Series

Engineering and Performance Data

Radiated sound power levels

Unit Model	CFM	M/S	Static Pressure @ 125 Pa							Static Pressure @ 250 Pa							Static Pressure @ 375 Pa							Static Pressure @ 500 Pa						
			125	250	500	1k	2k	4k	NC	125	250	500	1k	2k	4k	NC	125	250	500	1k	2k	4k	NC	125	250	500	1k	2k	4k	NC
A	100	2	35	34	31	27	23	17	<20	38	36	35	33	26	18	<20	40	38	35	34	28	19	<20	43	41	40	36	34	17	<20
	125	4	43	41	37	33	25	19	<20	43	42	39	36	28	22	25	46	42	36	38	29	23	<20	52	44	43	38	36	22	23
			47	43	41	35	26	21	26	49	47	43	39	29	23	33	52	46	42	40	32	27	28	56	51	47	41	37	26	34
	200	8	51	47	43	37	28	22	31	56	53	45	40	31	25	46	59	55	48	43	33	30	34	62	57	52	44	39	31	46
	250	10	57	54	44	38	29	24	40	61	57	48	41	32	26	57	65	60	52	44	36	32	49	69	63	56	47	40	36	59
B	200	2	42	36	35	28	22	16	<20	44	37	36	34	20	17	<20	45	43	37	35	22	18	<20	47	44	42	35	24	16	<20
	250	4	48	41	38	29	22	16	21	50	42	40	35	21	17	30	49	47	41	36	24	19	23	53	49	46	37	27	19	30
	300	6	53	44	43	31	23	17	25	54	46	43	35	23	18	40	57	55	46	38	25	19	34	59	54	48	41	28	21	40
	350	8	58	47	44	33	24	19	30	61	51	46	37	23	19	49	63	57	49	40	27	21	46	67	58	52	43	30	24	49
	400	10	62	52	47	35	25	20	41	66	56	49	38	25	20	58	70	61	53	41	28	22	59	73	64	57	44	31	25	58
C	250	2	43	38	36	32	24	18	<20	42	41	39	36	26	22	25	44	42	38	36	31	21	21	46	43	37	35	34	29	25
	300	4	47	42	39	34	28	22	<20	48	44	43	37	29	24	30	48	44	41	39	33	25	33	52	49	43	41	36	32	30
	350	6	54	47	44	37	27	24	24	56	51	46	41	32	27	39	55	53	47	43	37	28	45	59	53	54	46	39	35	39
	400	8	57	53	48	41	31	27	30	61	58	52	44	36	30	46	62	56	52	46	39	31	58	64	61	57	51	43	36	46
	550	10	62	58	51	42	33	28	36	65	61	54	45	38	32	57	68	63	57	49	41	36	64	71	67	61	54	45	39	57
D	350	2	38	36	32	27	22	19	<20	40	38	35	30	27	23	21	43	42	37	34	28	24	<20	44	43	41	34	32	26	21
	400	4	42	38	36	28	23	20	25	46	42	37	32	27	25	26	46	46	41	36	29	28	25	47	46	44	37	33	29	26
	500	6	47	43	39	30	25	22	35	49	47	42	35	29	28	33	52	49	45	37	30	29	35	53	51	47	39	35	33	33
	600	8	51	45	42	33	28	23	40	55	49	46	37	31	30	40	57	51	48	40	33	32	40	58	55	51	41	36	37	40
	700	10	56	49	43	36	29	24	46	58	51	48	39	32	31	49	60	55	52	41	34	35	46	64	59	54	46	38	39	49
E	500	2	44	41	35	33	28	19	<20	46	43	41	31	29	23	<20	47	44	43	40	32	29	<20	48	47	44	42	36	30	<20
	600	4	47	43	38	34	30	21	<20	51	48	44	35	33	27	28	53	49	48	42	36	31	<20	54	52	49	46	39	34	28
	700	6	51	47	43	37	32	25	30	56	52	47	37	36	28	34	57	52	51	45	39	34	30	59	56	51	49	42	36	34
	800	8	57	50	45	39	35	27	35	61	53	49	43	39	31	43	63	57	53	48	41	36	35	66	59	54	51	46	39	43
	900	10	62	51	47	41	39	28	43	65	56	51	47	42	33	58	69	60	56	51	45	40	43	72	65	59	54	48	43	58
F	700	2	42	43	40	35	32	20	25	44	42	41	39	32	26	30	46	44	43	40	38	28	25	47	45	43	42	36	30	30
	800	4	46	46	43	38	34	24	35	49	45	45	42	35	27	35	50	49	46	45	43	34	35	55	49	48	46	41	37	35
	900	6	51	50	47	41	37	29	40	54	51	49	46	39	31	45	56	53	52	51	47	39	40	61	54	51	49	46	43	45
	1000	8	56	54	51	46	41	35	50	60	57	52	49	43	38	50	65	57	56	56	51	44	50	68	61	57	55	52	49	50
	1100	10	62	57	53	51	43	38	60	65	61	58	54	49	45	57	71	66	62	60	54	52	60	75	69	64	61	57	54	57
G	1000	2	44	42	38	31	24	20	21	47	43	41	35	24	23	24	44	43	38	36	26	24	21	47	44	43	36	29	24	21
	1100	4	49	47	39	33	24	22	26	52	48	45	36	24	23	30	49	47	41	38	29	26	26	52	49	46	39	31	27	26
	1200	6	51	49	41	34	25	23	33	55	52	48	38	26	25	34	54	51	45	39	30	27	33	60	54	50	42	34	29	33
	1300	8	57	52	45	37	26	24	40	61	57	49	40	28	26	40	61	56	51	41	33	27	40	67	61	55	45	37	30	40
	1400	10	63	56	48	39	27	26	49	65	59	51	41	29	27	46	69	62	56	43	35	29	49	72	65	59	47	38	33	49
H	1000	2	38	36	34	28	26	20	24	40	36	35	32	27	21	21	41	39	36	33	29	22	24	43	41	39	35	32	22	<20
	1150	4	43	41	36	28	26	20	30	45	44	40	33	29	23	26	46	45	43	37	32	26	30	48	46	45	38	34	25	21
	1300	6	47	46	39	29	27	21	34	51	47	43	35	30	23	33	51	51	45	40	33	28	34	55	51	51	41	37	28	25
	1450	8	52	49	43	31	27	23	40	56	53	46	37	31	24	40	57	54	48	43	36	29	40	62	57	54	44	40	32	30
	1600	10	58	51	44	33	29	23	46	61	54	49	38	33	25	49	64	58	52	44	38	32	46	69	62	56	49	42	36	41
I	1500	2	45	43	32	32	24	21	27	47	44	38	34	27	22	<20	44	41	38	34	29	23	27	45	43	38	35	30	23	<20
	1700	4	49	46	35	33	26	23	35	51	49	41	36	29	23	29	51	43	41	36	33	24	35	52	50	41	37	33	26	<20
	1850	6	53	49	37	35	27	24	40	55	52	45	39	32	25	34	58	47	45	39	34	27	40	59	57	47	41	36	28	24
	2000	8	59	53	41	36	30	24	48	61	55	46	40	34	26	48	64	55	48	41	37	28	48	66	62	51	45	39	31	30
	2100	10	64	55	43	38	31	26	55	67	59	49	41	35	28	60	71	63	53	45	39	30	55	73	67	58	48	41	33	36
J	1800	2	46	44	41	35	27	22	30	48	45	44	36	29	23	<20	49	48	45	38	36	28	30	50	49	47	41	35	29	<20
	2000	4	49	47	43	36	29	23	35	53	50	48	38	31	25	25	54	53	50	40	38	31	35	56	54	52	44	38	32	25
	2300	6	53	52	45	38	31	25	45	56	54	51	41	34	28	35	59	58	53	44	39	34	45	62	59	57	49	41	35	35
	2550	8	59	57	49	40	32	28	50	62	58	54	45	26	30	40	65	62	56	48	42	36	50	68	65	63	52	44	36	40
	2800	10	65	61	53	41	33	29	57	69	65	56	47	38	32	46	72	68	60	51	43	37	57	75	71	65	54	48	39	46

Notes:

1. All data are measured in accordance with Industry Standard AHRI 880-2011.
2. All sound power levels, dB re: 10"12 Watts.
3. Data in this column constitute AHRI 880-2011 Standard Rating Conditions
4. Where APs is the inlet static pressure minus discharge static.
5. Application ratings are outside the scope of the certification program.

Selected Products of the company have been Classified / Listed / Tested by various international testing authorities.

Globally Recognized. Industry Respected.

Constant Air Volume

B - 50 Series

Engineering and Performance Data

Discharge Sound power Levels

Unit Size	CFM	M/S	Static Pressure @ 125 Pa							Static Pressure @ 250 Pa							Static Pressure @ 375 Pa							Static Pressure @ 500 Pa						
			125	250	500	1k	2k	4k	NC	125	250	500	1k	2k	4k	NC	125	250	500	1k	2k	4k	NC	125	250	500	1k	2k	4k	NC
A	100	2	44	42	38	37	32	26	<20	45	43	40	38	36	29	<20	48	46	43	39	38	31	<20	51	48	46	42	35	32	<20
	125	4	51	50	46	42	34	30	<20	52	50	46	44	39	33	25	54	51	47	44	41	35	<20	55	52	51	46	39	37	23
	150	6	59	57	51	46	37	33	26	60	58	52	48	41	36	33	63	60	56	50	43	40	28	64	61	60	54	43	43	34
	200	8	66	65	57	49	39	37	31	67	66	59	52	44	39	46	71	69	62	55	46	44	34	71	68	68	58	48	47	46
			71	70	62	51	42	39	40	75	74	66	55	46	44	57	79	77	70	58	50	48	49	82	79	74	62	54	51	59
B	200	2	45	43	39	38	33	27	<20	46	45	43	40	38	31	<20	49	47	45	43	39	32	<20	52	49	46	44	36	33	<20
	250	4	53	51	43	43	35	33	21	53	54	52	44	40	34	30	56	54	52	49	42	36	23	56	57	53	49	41	35	30
	300	6	61	58	48	47	39	36	25	60	62	57	47	43	38	40	64	63	59	52	46	39	34	66	63	59	55	46	38	40
	350	8	68	66	54	50	41	39	30	68	68	61	52	46	41	49	72	70	63	56	48	44	46	70	70	66	59	49	40	49
	400	10	72	69	61	54	43	41	41	75	73	65	57	48	45	58	80	78	68	59	51	49	59	82	79	72	64	56	43	58
C	250	2	41	42	38	36	32	28	<20	44	42	39	37	35	33	25	46	43	38	37	35	30	21	47	45	42	40	37	34	25
	300	4	48	46	41	38	35	31	<20	47	44	43	40	37	35	30	53	47	42	44	38	35	33	54	50	49	44	43	38	30
	350	6	52	51	45	41	37	34	24	54	52	48	43	40	36	39	59	55	49	47	41	39	45	61	56	55	49	45	41	39
	400	8	58	57	48	45	40	37	30	60	59	54	47	42	38	46	65	61	56	53	46	43	58	68	63	61	54	49	45	46
			65	61	53	49	41	39	36	68	65	58	51	45	42	57	71	68	63	55	49	46	64	74	71	67	59	53	49	57
D	350	2	46	43	41	37	34	29	<20	47	45	43	40	38	34	21	49	46	42	41	39	32	<20	50	48	46	42	40	35	21
	400	4	54	52	44	41	37	32	25	55	49	48	43	40	37	26	57	54	47	46	42	36	25	59	56	54	46	44	39	26
	500	6	63	58	49	47	41	35	35	64	57	55	48	46	38	33	68	62	55	53	46	41	35	67	64	63	55	52	41	33
	600	8	69	64	55	53	45	37	40	71	66	59	54	49	42	40	74	68	61	58	51	46	40	76	71	67	59	55	48	40
	700	10	75	70	61	57	46	40	46	79	71	64	59	51	46	49	82	75	69	62	55	50	46	84	79	73	66	58	52	49
E	500	2	44	42	39	35	33	27	<20	46	43	41	38	35	32	<20	51	46	42	39	35	33	<20	52	50	46	43	38	34	<20
	600	4	51	47	42	38	36	32	<20	53	48	46	42	39	36	28	56	51	47	41	38	37	<20	57	54	52	48	43	37	28
	700	6	58	55	49	43	39	36	30	61	58	53	47	43	39	34	63	57	58	48	45	41	30	65	63	58	55	47	42	34
	800	8	65	59	53	47	43	39	35	67	62	59	51	47	43	43	76	64	63	54	51	48	35	77	74	65	59	56	49	43
	900	10	72	65	59	51	48	43	43	75	69	63	55	52	47	58	82	72	67	60	56	52	43	82	75	70	65	59	53	58
F	700	2	45	44	41	36	34	29	25	47	45	43	40	35	30	30	50	46	44	42	38	35	25	54	48	45	42	39	36	30
	800	4	53	51	46	39	36	30	35	55	52	50	44	38	34	35	56	54	51	45	43	37	35	61	55	53	47	43	42	35
	900	6	59	56	50	43	39	33	40	61	58	54	48	41	37	45	66	59	56	49	46	42	40	69	62	57	51	48	44	45
	1000	8	66	60	55	47	42	37	50	68	65	57	52	45	41	50	73	67	61	54	51	47	50	76	69	63	56	52	49	50
	1100	10	72	65	58	51	45	39	60	75	69	61	54	49	43	57	81	72	66	59	54	51	60	84	74	68	63	57	54	57
G	1000	2	46	45	42	37	35	31	21	47	44	43	41	36	32	24	51	48	46	44	39	35	21	53	49	47	43	39	37	21
	1100	4	51	50	47	40	38	34	26	55	51	49	46	41	36	30	56	53	50	49	43	39	26	61	55	54	51	43	42	26
	1200	6	61	57	51	43	42	38	33	64	58	56	50	46	40	34	66	59	56	53	47	44	33	68	63	60	55	48	48	33
	1300	8	68	62	57	48	45	41	40	72	65	59	54	49	43	40	74	64	63	57	54	49	40	75	70	65	61	56	53	40
	1400	10	75	69	61	52	49	42	49	78	71	65	57	52	48	46	81	74	69	61	58	55	49	83	78	71	66	61	58	49
H	1000	2	44	43	40	38	34	31	24	45	43	42	38	34	30	21	47	44	43	42	38	34	24	50	48	45	41	38	36	<20
	1150	4	47	46	43	41	36	33	30	53	49	45	43	36	34	26	56	51	50	45	41	36	30	57	55	50	46	42	39	21
	1300	6	54	52	48	45	39	36	34	59	55	51	47	40	38	33	61	58	54	48	46	40	34	64	60	57	49	47	45	25
	1450	8	59	58	52	48	41	39	40	64	61	57	51	45	39	40	69	65	59	53	49	46	40	72	68	63	55	52	49	30
	1600	10	69	63	58	53	43	41	46	72	68	64	55	49	45	49	77	71	67	59	55	52	46	80	75	69	63	59	54	41
I	1500	2	46	44	41	38	35	32	27	47	45	43	39	36	32	<20	48	46	44	43	40	35	27	52	50	46	44	41	37	<20
	1700	4	52	47	44	41	37	34	35	54	51	46	42	38	35	29	59	53	50	47	43	38	35	61	56	51	49	42	40	<20
	1850	6	59	55	48	44	39	37	40	61	58	54	47	41	36	34	66	60	57	52	48	42	40	68	62	57	53	47	44	24
	2000	8	67	62	55	48	43	39	48	69	66	59	51	46	48	48	73	58	63	57	52	47	48	74	68	63	58	51	50	30
	2100	10	72	67	61	52	46	42	55	75	71	65	57	51	59	60	80	73	68	61	55	52	55	82	76	71	66	58	54	36
J	1800	2	47	44	43	41	37	33	30	48	47	45	40	37	33	<20	51	49	47	44	39	31	30	53	50	48	45	42	38	<20
	2000	4	53	49	46	44	39	35	35	56	52	49	46	41	37	25	58	55	51	48	43	36	35	59	57	55	50	48	42	25
	2300	6	61	56	54	49	42	39	45	64	60	56	49	46	41	35	67	61	58	54	47	45	45	68	65	64	56	53	47	35
	2550	8	68	61	59	52	45	41	50	73	66	61	54	50	46	40	75	68	65	59	53	51	50	76	72	69	63	58	52	40
	2800	10	75	68	65	58	49	45	57	79	72	69	62	56	51	46	83	76	73	65	60	57	57	84	79	75	69	63	59	46

Notes:

1. All data are measured in accordance with Industry Standard AHRI 880-2011.
2. All sound power levels, dB re: 10"12 Watts.
3. Data in this column constitute AHRI 880-2011 Standard Rating Conditions
4. Where APs is the inlet static pressure minus discharge static.
5. Application ratings are outside the scope of the certification program.

Selected Products of the company have been Classified / Listed / Tested by various international testing authorities.

Globally Recognized. Industry Respected.

Fan Powered Variable Air Volume

B-60 Series

Model: VAV-GB- 61x - Parallel Flow
Construction: Galvanized Steel (GI)
Application: Light & Medium Duty

Fan Powered VAV Model VAV-GB-61 is parallel fan powered terminal unit features intermittent parallel fan operation. Fan Powerd VAV B-61 is "designed to-maintain optimum occupant comfort levels by supplying warm induced plenum air, cold primary air (VAV) or a mixture of both to condition the space.
Fan-powered parallel units offer energy savings due to intermittent fan control. The fan energizes only in heating mode when the space needs heat. Additional energy savings are obtained by using warm plenum air for free reheat. Motor heat is never wasted in parallel units. They are an excellent choice when minimal zone heating is needed.

Standard construction

Casing
0.9 mm thick galvanized sheet steel.
Insulation
25 mm thick 32 kg/m^3 density Acoustic liner.
Blade
0.9 mm thick galvanized sheet steel.
Flow grid
Flow grid multi point with 12 inlet holes in four concentric circles.
Axle Shaft :
12 mm diameter axle shaft made of galvanized steel.
Bearings :
12 mm diameter Brass bearings.
Gasket
Neoprene Gasket.
Controls :
Modulating / On-Off.

Optional Construction

Controls
Backnet DDC with suitable thermostat.
Duct Heater
Slip-in type electric duct heater (230V AC 1 Phase or 400V AC 3 Phase)
Double skin
Insulated internal walls surface with Galvanized perforated sheet used for low noise applications to minimise breakout noise.
Neck connections
Round inlet with round outlet and square inlet with square outlet.
Access Door

VAV-GB-61

Technical Features:

- Fan on during heating
- Sized to handle heat air flow
- Higher supply pressure
- Variable sound and air flow
- Metal encapsulated edges limit fiberglass insulation erosion into the airstream.
- Single-point power connection reduces installed cost. Fan is outside primary airstream and runs only when heating is required.
- Wide range of fan airflows available from single speed motor with speed control.

Fan Powered Variable Air Volume

B-60 Series

Model:VAV-GB-61 - Construction Details And Dimensions

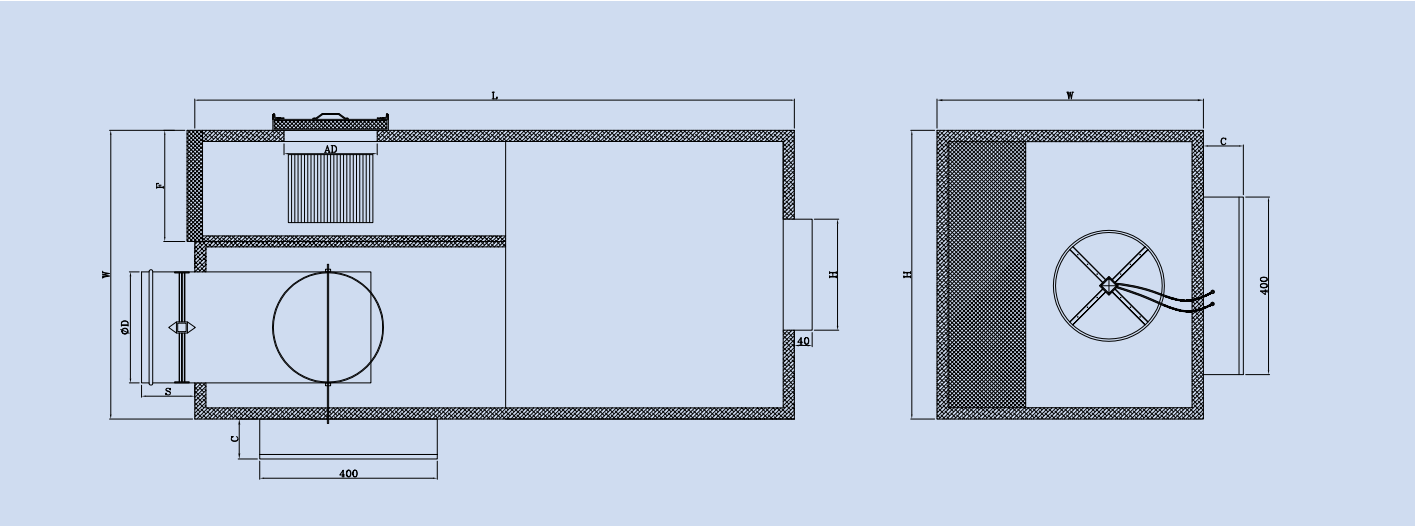

Dimensional data for Fan powerd VAV-GB-61												
Model (X)	Fan Air Flow Range (Cfm)	d Inlet (mm)	w (mm)	h (mm)	L (mm)	L+SA	Discharge			c (mm)	S (mm)	Fan Model (X)
							a	b	t			
A	250	150 ø	600	350	700	1300	450	300	40	80	125	100 - L
B	400	150 ø	600	350	700	1300	450	300	40	80	125	125 - L
C	550	200 ø	700	450	700	1300	450	400	40	80	125	150 - L
D	700	200 ø	700	450	700	1300	500	400	40	80	125	160 - L
E	900	250 ø	700	450	700	1300	550	400	40	80	125	200 - L
F	1100	250 ø	700	450	700	1300	600	400	40	80	125	250 - L
G	1400	300 ø	800	525	750	1350	650	475	40	80	125	315 - L
H	1600	300 ø	1050	625	900	1500	700	575	40	80	125	355 - L
I	2100	350 ø	1100	700	900	1500	750	650	40	80	125	400 - L

Selected Products of the company have been Classified / Listed / Tested by various international testing authorities.
Globally Recognized. Industry Respected.

Fan Powered Variable Air Volume

B-60 Series

Model: VAV-GB- 62x - Series Flow
Construction: Galvanized Steel (GI)
Application:Light & Medium Duty

Fan Powered VAV Model VAV-GB-62 recirculation fan draws cold air from the primary air duct and warm air from the return plenum in varying amounts, to satisfy zone temperature requirements. Warm air and cold air blend in the unit fan before entering the discharge plenum.

Fan-powered series units have fans which are always energized in occupied mode. They are common in premium VAV systems and in applications such as conference rooms, cafeterias, etc. looking for constant high airflow rates.

Standard construction

Casing
0.9 mm thick galvanized sheet steel.

Insulation
25 mm thick 32 kg/m^3 density Acoustic liner.

Blade
0.9 mm thick galvanized sheet steel.

Flow grid
Flow grid multi point with 12 inlet holes in four concentric circles.

Axle Shaft :
12 mm diameter axle shaft made of galvanized steel.

Bearings :
12 mm diameter Brass bearings.

Gasket
Neoprene Gasket.

Controls :
Modulating

VAV-GB-62

Technical Features:

- Fan on all the time
- Sized to handle cooling
- Lower supply pressure
- Constant sound and air flow
- Metal encapsulated edges limit fiberglass insulation erosion into the airstream.
- Single-point power connection reduces installed cost. Fan is in line with primary airstream and runs continuously to provide a constant airflow into the conditioned zone for excellent air motion and comfort.
- Wide range of fan airflows available from single speed motor with speed control.

Optional Construction

Controls
Backnet DDC with suitable thermostat.
Duct Heater
Slip-in type electric duct heater (230V AC 1 Phase or 400V AC 3 Phase)
Double skin
Insulated internal walls surface with Galvanized perforated sheet used for low noise applications to minimise breakout noise.
Neck connections
Round inlet with round outlet and square inlet with square outlet.
Access Door

Fan Powered Variable Air Volume

B-60 Series

Model: VAV-GB-62 - Construction Details And Dimensions

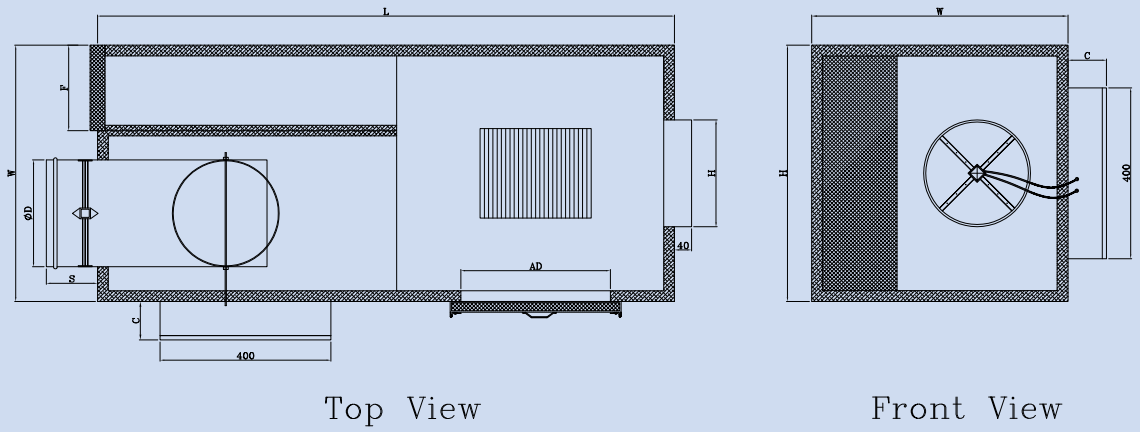

Dimensional data for Fan powerd VAV-GB-62												
Model (X)	Fan Air Flow Range (Cfm)	d Inlet (mm)	w (mm)	h (mm)	L (mm)	L+SA	Discharge			c (mm)	S (mm)	Fan Model (X)
							a	b	t			
A	250	150 ø	500	350	700	1300	450	300	40	80	125	100 - L
B	400	150 ø	500	350	700	1300	450	300	40	80	125	125 - L
C	550	200 ø	500	450	700	1300	450	400	40	80	125	150 - L
D	700	200 ø	500	450	700	1300	500	400	40	80	125	160 - L
E	900	250 ø	500	450	700	1300	550	400	40	80	125	200 - L
F	1100	250 ø	500	450	700	1300	600	400	40	80	125	250 - L
G	1400	300 ø	550	525	750	1350	650	475	40	80	125	315 - L
H	1600	300 ø	700	625	900	1500	700	575	40	80	125	355 - L
I	2100	350 ø	700	700	900	1500	750	650	40	80	125	400 - L

Selected Products of the company have been Classified / Listed / Tested by various international testing authorities.
Globally Recognized. Industry Respected.

Variable Air Volume Controls

Optional fittings : Duct Heaters

1) VAV with Duct Heater
VAV with electric coil (Fins Tubular)

- On / Off *
- Second Stage
- Third Stage
- Thyristor Modulating (0-10V)
- Fins with Stainless Steel*

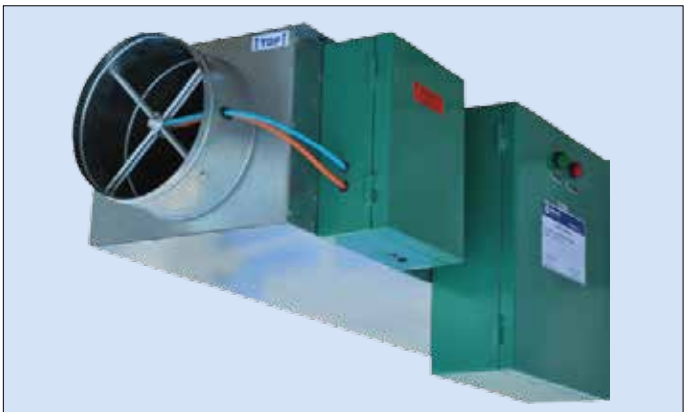

VAV-GB-31E + Slip-in Type Duct Heater

2) VAV with heater batteries
VAV with electric Duct Heater

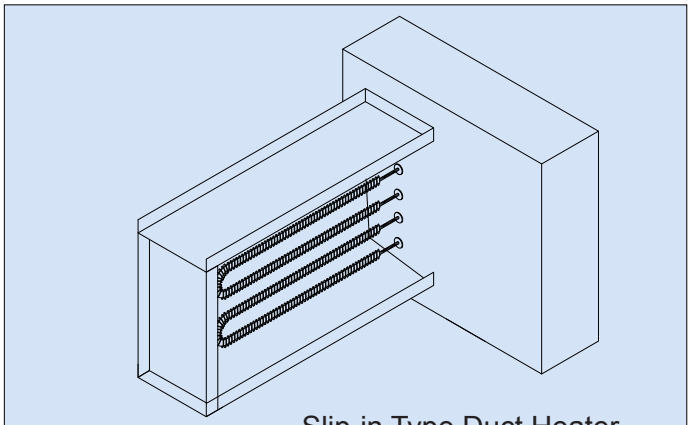

Slip-in Type Duct Heater

Choice of Controls and Actuators

BETEC CAD offers a various combinations of Controls, Actuators and Thermostats to suit customer and site requirements and cost effectiveness on (HVAC) Air conditioning cooling / heating / ventilating applications. Supply of Controls as per customer option. Various combination of options are shown below to suit the customer requirements.

Note : For further technical details please refer ***BETEC CAD*** **Duct Heaters** Chapter **Ref. BC 14.**

* indicates Standard Supply of ***BETEC CAD.***

Special Notes:

Selected Products of the company have been Classified / Listed / Tested by various international testing authorities.

Globally Recognized. Industry Respected.

Special Notes:

Selected Products of the company have been Classified / Listed / Tested by various international testing authorities.

Globally Recognized. Industry Respected.

beteccad.com

© Copyright reserved for ***BETEC CAD.***

"Due to continuous progress and product improvement, ***BETEC CAD.*** reserves the right to make changes without notice"

Aug - 2018